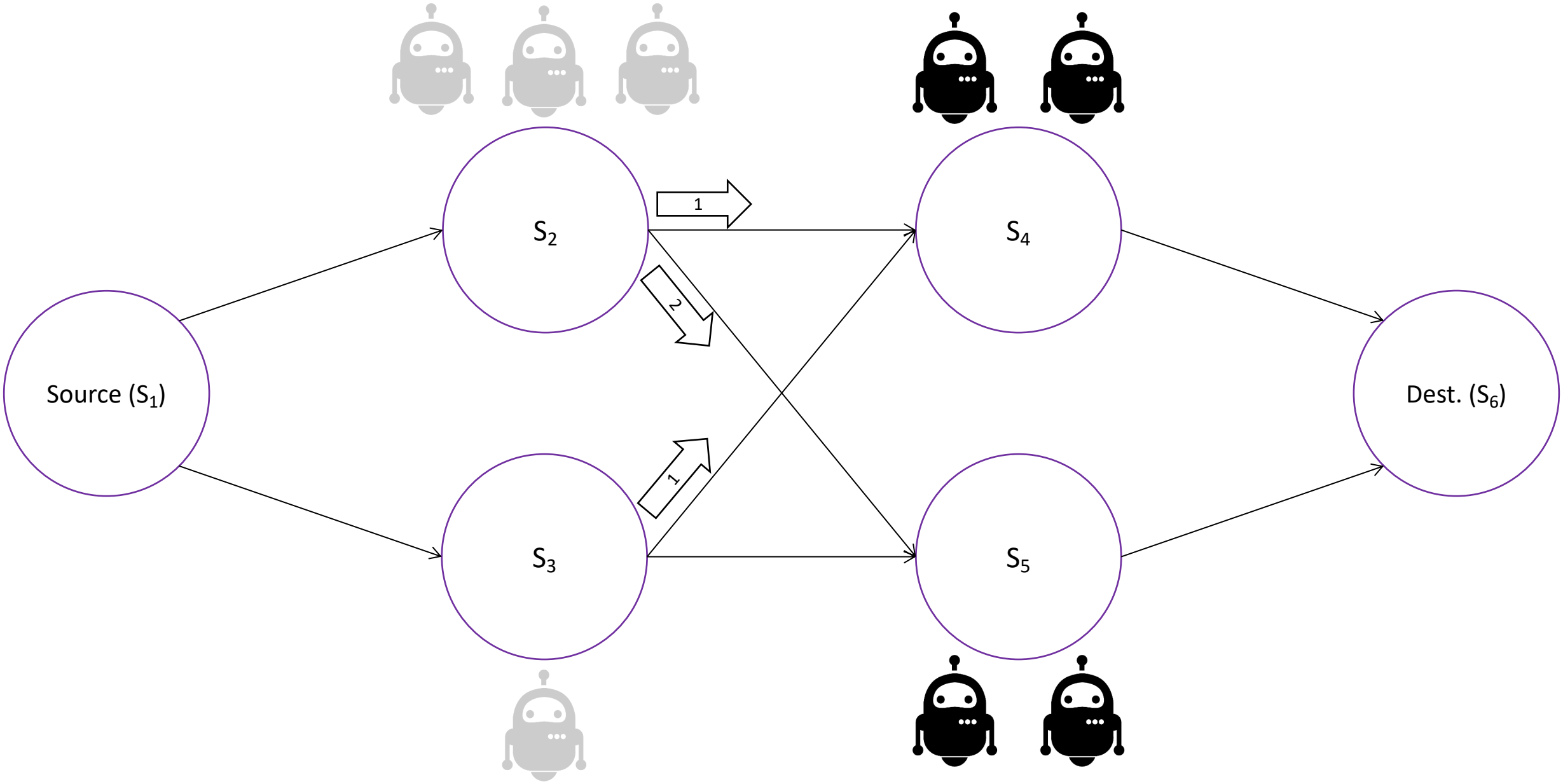
Source (S_1)
S_2
S_3
S_4
S_5
Dest. (S_6)
1
2
1