Master Thesis

Design and Simulation of Engine Control System

Major: Automotive Engineering

Candidate: Sun Haiteng

Student Number: S232225

Tutor: Professor Daniela Maffiodo

Professor Raffaella Sesana

2018.01

Abstract

The objective of this paper is to design and simulate the engine control system for engine test bench, which should be developed for didactic usage. The controlling module or described as the engine control unit of this test bench would be developed on a microcontroller unit called Arduino due to the feasibility and simplicity. The programming language of this microcontroller is based on C++. It is time consuming, difficult for student without solid programming skill and complicated to develop the code of engine control system directly on Arduino. In order to reduce the development time and cost of engine control system, the simulation of engine control system could be accomplished. The model based code of engine control system could be simulated in Matlab/Simulink. This simulation of engine control system could be verified by combination with virtual engine model software.

In this paper, different engine control strategies are introduced and air fuel ratio control is utilized since the engine test bench is only for teaching usage and air fuel ratio has better understanding. The engine should be modeled by virtual engine modeling software, GT-Power. The engine would be a 4 cylinders, SI engine with turbocharger. The engine control system should be modeled by Simulink. In this control system, three different engine operating conditions, such as idle speed condition, stable operating condition and transient operating condition, should be considered. After implementation models of engine and engine control system, the simulation results should be demonstrated as desired characteristics of engine performance. At the end of this paper, the simulation results should be compared with on board diagnostic results to verify engine control simulation and to prove that the coupling method of Simulink and GT-Power could provide a stable solution aiming at using an accurate engine model to save development cost and time during early stage of examining the design of control system.

Table of Contents

List of Figures

Nomenclature

AFR	Air fuel ratio
a_t	Throttle angle
C_d	Discharge coefficient
C_p	Heat capacity under constant pressure
D	Throttle bore diameter
h_m	Mass transfer coefficient
I_{eng}	Rotational inertia of engine
K_i	Integral gain
K_d	Derivative gain
K_p	Proportional gain
m_a	Mass flow of air
$\dot{m}_{ai}$	Air mass flow in intake manifold
$\dot{m}_{at}$	Air mass flow intake port
$\dot{m}_{fc}$	Fuel mass flow into cylinder
$\dot{m}_{fi}$	Fuel mass flow from injector
N	Engine speed
P	Cylinder pressure
P_e	Exhaust manifold pressure
r	Compression ratio
T	Temperature
T_{brake}	Brake Torque
T_i	Indicated torque
V_m	Engine volume
η_{vol}	Volumetric efficiency
θ_i	Throttle opening angle
θ_0	Angle for minimum leakage area
K	Ratio of specific heat
λ	Lambda value
ρ_a	Air density
TDC	Top dead center
BDC	Bottom dead center
IVO	Intake valve opening
IVC	Intake valve closing
EVC	Exhaust valve closing
EVO	Exhaust valve opening

Chapter 1. Introduction

1.1 Background

In pace with the rapid development of various new technologies of engines, the engine electronic control technology grows rapidly and becomes more and more complicated. Therefore, during the researching and developing period of engines, the reduction of cost and time of design and development stage is necessary, in which the developing process of engine can be boosted. While establishing the model of control system, the spark ignition engine model is needed to verify the control system. Ordinarily the model of engine control system is built in Matlab/Simulink, however, some hypotheses are assumed when the model is built based on this kind of platform. Some hypotheses can only indicate the changing tendency of partial engine parameters during the changing period of engine control strategy. Nevertheless when the real control component is running with the real engine, some problems may occur unpredictably, thus the control strategy should be modified and the control component should be optimized.

1.2 Introduction of Project

The project "Design and development of an engine test bench" aims at providing an engine test bench for a spark ignition engine for didactic usage in Filos. Filos is a insertion work orientation formation institution. It has a successful educational program for teaching vehicle maintenance ability. For teaching purpose as improving students knowledge of engine operating, as well as making students study the failure of sensors and actuators, study the failure of engine components, a simple engine test bench is needed. The main conception is using microcontrollers to control the engine and show parameters of engine operating condition such as engine speed, intake manifold pressure, air fuel ratio and etc. The engine test bench should compose of rack with engine support, engine with cooling system, starter, alternator as load applied to the engine, wires connecting sensor, actuator with microcontroller and computer to show the results. For teaching usage, the test bench should be able to analyze three different operating conditions of engine likes idle condition, stable condition and transient condition. Since the engine prepared for using to design the engine test bench is without Engine Control Unit (abbreviated as ECU) or any engine management system, the control system of the engine should be considered to be developed in the engine test bench. The controlling module described as the engine control unit would be developed on an Arduino due to the feasibility and simplicity. The arduino is computer hardware with open source, open project and users community. The single board microcontrollers could be designed and be manufactured based on the Arduino, as well as the microcontroller kits which could be utilized for building digital devices and interaction objects to sense and control devices in the physical world. This board is equipped with digital pins of analog input or output in groups, with the purpose of connecting to different expansion boards or shields as well as other electronic circuits. Feature of this board is the serial communications interfaces, including USB equipped on some models for loading programs from PC. The language used to programming using a dialect of features from the programming languages C and C++.

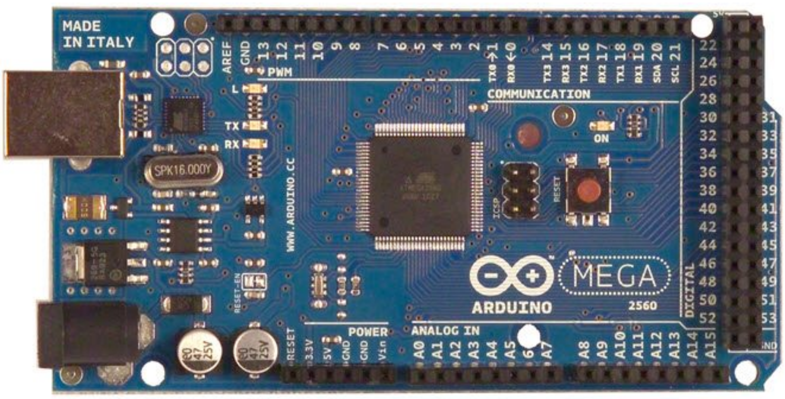

Figure 1.1 Version of Arduino used

The basic idea of this project is to develop an engine control unit on the arduino, which interacting with the engine using sensors and actuators. After complying this stage, a graphical user interface design (GUI design) could be achieved by Labview. The communication strategy between the microcontroller and the personal computer is accomplished by wireless communication modules called ZigBee, which provides low-cost, low-power needed in wireless control and monitoring applications. The schematic of the total methodology could be shown as:

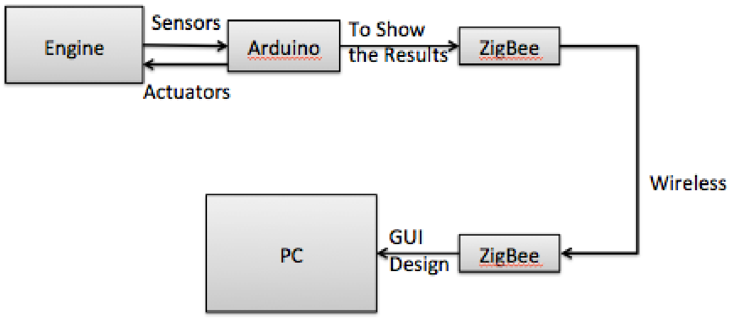

Figure 1.2 Schematic of the engine test bench project

The control strategy is using the idea that the arduino reads the missing tooth output to determine the engine speed and crank angle position by the rpm sensor and crank angle sensor (cam position sensor) respectively. It then drives one pin which will connect to the fuel injector with a pulse of fuel per revolution and another pin which drives the spark for one spark per revolution. The fuel injector timing and amount of fuel injected, as well as the ignition timing should be both variable via a serial connection between the arduino control unit and a computer.

The to-be-developed control unit can be considered as an embedded real-time system, which is dedicated to manage a fuel-injected, spark ignition 4-cylinder gasoline engine. The following methods could be adopted to develop this type of control system:

1) Develop the code on the embedded device (ex. Arduino Mega) with continuous testing on the engine.

2) Develop the code at one fling on the embedded device before the final testing on the engine. It demands a high level of certainty of the code development.

3) Build digitally an engine simulator on PC along with a engine control software to control it, and then program the control unit into an embedded device in order to do the testing on a real machine.
4) Build an engine simulator and the control unit for control purpose on an embedded device.
5) Develop the model-based code in simulating software such as Matlab or Simulink with an engine simulator and ECU in the software respectively, and then choose a target to program the code for testing on an embedded device.

The first three options are very time consuming with poor overview, in a while some software experts are needed for generating the control unit code of arduino manually. The fourth options needs to develop an engine model in complete C or C++ programming language which is a massive mission to be done for developers without a information engineering educated background. Therefore the last one is chosen: with the help of Matlab/Simulink and engine simulating software, the open loop or closed loop test could be easily achieved with graphical overview, which is beneficial for mechanical engineering without a solid programming skill. Besides that, the auto code generation of Simulink could be utilized. It is a fast code generation with code generated without errors.

1.3 Problem Solution

To solve the above problem, an engine model, which can demonstrate the engine performance more systematically and integrally, should be established. The control strategy could be simulated in the Simulink environment. By combining the virtual engine simulator model with Simulink simulation, it could observe the changing of the characteristics of spark ignition engine, in hence to verify the correctness of control strategy. The control strategy simulated in the Simulink could be auto-converted into C or C++ programming language code, which could be stored in the Arduino. Therefore, in the early stage of development, the development cost and time can be reduced distinctly, with increased quality.

The working flow of this project should be:

1) Development of the engine model using virtual engine modeling software.
2) Development of software function using a graphical programming language (such as Simulink) according to the requirement and features predefined.
3) Test the software functions in Simulink with coupling of the engine model.
4) Generate C or C++ programming code and flash it into the Arduino.
5) Test the reliability and function of the engine sensor and actuators, connecting the arduino, computer and engine.
6) Graphical user interfaces design
7) Set up of the engine test rig
8) Verification of software functions at engine test bench.

This thesis focuses on the development of engine model and the simulation of control functions, also focuses on the test the control functions with virtual engine model.

1.4 GT-Power and Matlab/Simulink

GT-Power is commercial software especially designed for modeling and simulation of vehicle powertrain system. Nowadays, GT-Power has been adopted extensively by the most automotive analysis company. Thanks to its function of code design based on object, the engine could be modeled followed parts by parts. It would be possible for users to individually specify the parameters of each engine component via compiling the property dialogue box attached to the corresponding block. Moreover, the engine manufacturer provides most of the key parameters, for instance, the valve lifts of intake and exhaust system.

The model made by GT-Power is primarily the foundation as dynamics one dimensional fluid. The model represents the flow transfer in the fluid tubing and other component of a motor system, as well as the heat transfer. The merge stage of the model takes a comparatively enduring time, frequently counted by hours, with providing the engine performance in steady state. Due to this reason, the models made by GT-Power are impossible to be adopted for the engine simulation in real-time. In addition, GT-Power is qualified to provide the accurate results of simulation in steady state. However, the reliability of simulation in transient condition is comparatively low. In hence, modeling by GT-Power can be considered as a tool commonly used to forecas engine characteristic in steady state.

Matlab is a high-level language, which is specialized at science and engineer calculus, system simulation. It integers numerical calculation, visible image and processing and multimedia technology, becoming the fundamental tool and application in computer simulation and computer aided design field.

Simulink is a package inside Matlab, which can model, simulate and analyze dynamic system. Simulink has a powerful function and convenient operation, providing graphical simulation tools. Subsystems are allowed to be set up under this operating platform, which can combine and calibrate model structure. The process of simulation is interactional; thereby the modeling and simulation of dynamic system would become simpler.

1.5 Thesis Contributions

This research uses modeling of the single stage turbocharged SI engine as an entry point, with a mixing method of mean-value crank based and time based modeling. The mean value time based method is adopted to model the air handling system, while the spark ignition combustion process as functions of engine crank angle. The developed combustion model allows simulation of the spark ignition combustion mode. The corresponding GT-Power model ensures calibration and validation of the engine model.

Subsequently, the engine model will be implemented and validated in a simulation environment based on Simulink.

The content presented in this thesis is organized by 7 chapters: In Chapter 2, a review of existing technology and literature on the subject is given. Focus is particularly placed on the engine modeling method and engine control strategy. Meanwhile the new technologies and challenges are also presented briefly. In Chapter 3, the single-stage turbocharged SI engine should be modeled by using the mean value engine modeling method; the model is modeled under the usage of GT-Power model. In Chapter 4, the control strategy is established in Simulink. In Chapter 5, the coupling of the developed model with the Simulink simulation control model is depicted with the proposed numerical approach. In Chapter 6, the final results and analysis would be presented. In the last Chapter, on board diagnosis test and its results should be compared with simulated results. Conclusion and future work are drawn.

Chapter 2. Literature Review

2.1 Introduction

Upon the former three eras, great progress has been made in improving the efficiency of automotive engine, as well as the fuel economy, and exhaust emissions. The part of this progress is due to the ability of the researchers to model the engines in order to examine and test possible innovations. Numerous rising technologies, thanks to the research and development by engineers, are driven by the impending energy climacteric and the more and more rigorous emission limitation of vehicle and legislation of fuel economy. The appearance of these new technologies have significantly increased the complexity of internal combustion engine system.

2.2 Review of existing technology

2.2.1 Engine Downsizing

The definition of engine downsizing could be generally described by Thirouard et al [1] By using a engine with smaller volume, the engine could operate at higher specific engine loads achieving lower fuel consumption.

The mainly method to accomplish reduction in fuel consumption is reducing the friction loss according with downsized engine volume; as well as the reduced pump losses due to the need for less intake throttling so that the engine can operate at higher loads to have better efficiency. With respect to friction, the friction on slipping exterior is representatively reduced via decreasing value of area as piston ring contacted with cylinder, which could be explained as with the number of cylinder reducing, as well as reducing crankshaft journal bearings swept area.

The advanced power concentration, which represented as short displacement, thereby improving fuel consumption performance. For ease of downsizing, full load performance potential is typically maintained via pressurization (Supercharging or boost). Especially for gasoline engines, the extreme variability of valve timing for both inlet and exhaust valves in combination with turbocharging, direct fuel injection can also help the progress of downsizing. Due to its charged air cooling effects, gasoline direct injection, with abbreviation as GDI, allows higher compression ratios to increase thermal efficiency; and variable valve timing (of intake and exhaust at the same time) can both increase scavenging and reduce partial load throttling losses.

These technologies have been combined and adopted by multiple manufacturers to reduce emissions through engine downsizing, including Ford and Volkswagen. Fiat even eliminated the throttle (and therefore throttling losses altogether) with their ‘Multi-Air’ electro-hydraulic valve actuation technology. Other technologies that work with downsizing include spray guided direct injection (abbreviated as SGDI) and variable compression ratio (VCR), although non of them has already attained production.

The foundation of increased specific engine output which is essential to engine downsizing, can be marked back with the definition of basic engine performance parameters.

The equation of specific power can be represented as:

$$\frac{p}{A_c} = \frac{\eta_f \eta_v \rho_{a,in} Q_{HL} \bar{S}_p (F/A)}{4}$$

From this equation, a number of factors are deduced, which directly affect the performance of the engine, indicating that adding any of these factors will improve engine performance (all other things being equal):

1) Specific Fuel consumption which could be considered as fuel conversion efficiency since these two factors are inversely proportional
2) Volumetric efficiency of engine
3) Density of intake air
4) Maximum fuel quantity that can be utilized effectively in the cylinder
5) Average value of piston speed

The following figure shows that: The method of engine downsizing targets at point 2 and point 3 in this list, and point 1, which is at least for part load in actual operating driving condition, likewise if not full load conditions.

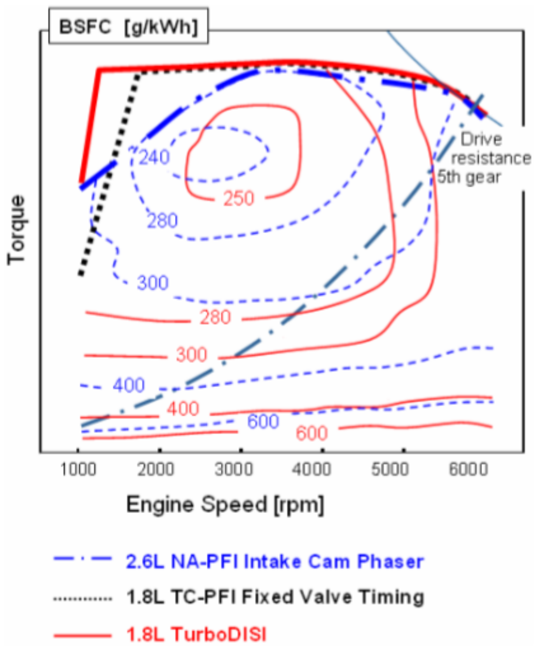

Figure 2.1 Objective of Engine Downsizing

2.2.2 Pressurization

Pressurization may be described as introducing the air or the mixture of air-fuel into the engine cylinder with a certain density, which is larger than ambient pressure, allowing the proportionately larger quantity of fuel to be used for combustion, thereby increasing the hidden power output of engine. There are three basic approaches to accomplish this: turbocharging or turbocharger, pressure wave supercharging, and mechanical supercharging.

a) Turbocharging

A turbocharger is a device that has a compressor and turbine connecting with the same shaft, in which the turbine could be driven by energy in the unburned residual gases of engine; the turbine in turn drives the compressor, which provides an increase in intake pressure. The Sankey diagram for a typical 1.4-liter, four-cylinders spark-ignition gasoline engine,which is reproduced from Stobart and Weerasinghe, is presented in Figure 2.2. Up to a third of the fuel energy is converted to useful work, while a maximum of nearly 50 percents of the fuel energy is wasted as waste heat. One of the major advantages of a turbocharger is that it uses exhaust gas energy, which otherwise would be wasted resulting in an overall increase in thermal efficiency.

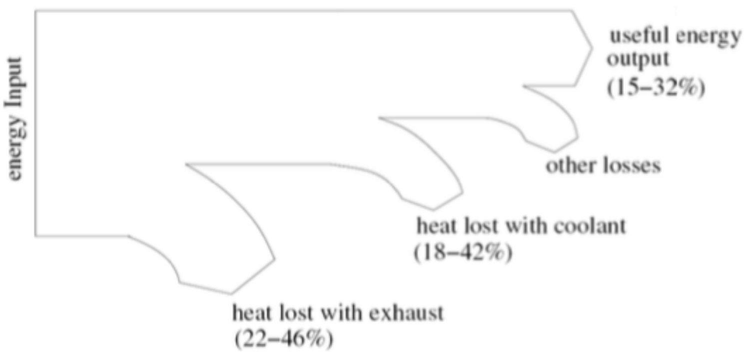

Figure 2.2 Sankey Diagram

Common automotive turbochargers are equipped with radial flow turbine and centrifugal compressor. Considering the utilization with a automotive engine, due to the design and operating fundamental, this kind of turbo machines have an optimum operating point, however, are not adequate perfectly for operation across a wide range of flow.

Emissions reduction technologies such as exhaust gas recirculation, which is known as EGR, and diesel particulate filters, which is known as DPF, also make compressor turbine matching or coupling a problem. When fitting a turbocharger to an engine, there is a fundamental reconciliation between engine torque during low speed condition and engine output power at high engine speed. Large turbochargers provides the power at high speeds, however, it would suffer from slow speed engine operating condition performance and transient response due to the lack of exhaust gas flow rate to overcome the inertia of the system. On the other hand, small turbochargers offer improved torque under low engine speed working condition and transient response due to the reduced inertia, even though at high engine speeds working conditions the turbine bypass is required to prevent excessive turbocharger speed, sacrificing efficiency; in addition, small turbochargers generally perform a lower efficiency because of the increased pressure loss leakage between turbine and housing.

For forced induction engines, the driving performance of comparable naturally aspirated devices is a goal ideally. To reduce the effects of turbo compression compromises, plenty solutions have been proposed to reduce the effects of turbo compression trade-off.

The turbine bypass, which is also know as waste gate, allows the correct size of the turbocharger to achieve low engine speed performance. With the speed increasing, the waste gate opens, causing a proportion of the exhaust gas be allowed to bypass the turbine, which has the result in limiting boost pressure and preventing the turbocharger from overspeeding. Nevertheless, as mentioned earlier, thermal efficiency is sacrificed due to the energy of wasted exhaust gas.

The idea of variable turbine geometry has existed for sometime, where the effective turbine area or aspect ratio can be matched to varying exhaust gas flow rates. The concepts designed to accomplish this can be divided in two categories, depending on whether it is the geometry of the volume or the nozzle that is adjustable. A turbocharger with variable geometry volume is a lower cost alternative to variable geometry nozzle placement, which is generally more complicated [2]. Although experiments have demonstrated that transient response has been improved, volute turbo designs with variable geometry have not virtually achieved commercial production.

Several factors limit the achievable single compressor pressure ratio, which is caused mainly by reduce the efficiency of the high pressure ratio and required temperature limits of mass flow range. A series of turbocharged configuration may become feasible. Considering a two-stage system, two turbochargers are placed in series in order to allow the exhaust gases undergo two stages of expansion, with the intake charge going through two stages of compression. Using conventional turbocharger may develop a high expansion ratio and total pressure, without sacrificing efficiency or mass flow rate range. The system may comprise a bypass valve connected in series, which is for a turbine and / or compressor in order to achieve greater operational flexibility.

In a parallel turbocharged arrangement, two, in some cases four; turbochargers of the same size are used instead of the larger single unit. Parallel turbocharging is usually used on engines with six or more cylinders, with the exhaust pipes divided into several groups from the cylinders exhaust flow direction, which is most beneficial to utilize exhaust pulse effects. During using a engine with turbocharging system with two turbochargers, each turbine receives exhaust gases from the half of cylinders from the engine; and on the intake side, the compressors usually enters the ordinary intake chamber.

In a sequential system, two turbochargers, as well as more in some cases, are arranged in parallel providing the pressurized air supplied to the common intake manifold, similar to parallel turbocharging condition. Unlike pure parallel arranged configuration, in which the turbines are driven by exhaust gases from common exhaust manifold are driven by flow control valves; in sequential turbo system, the number of turbochargers in operation can vary. The turbochargers may have the same or similar size characteristic. In this case, for a twin-turbo system, in the first order period which indicates the engine operating at low engine speeds, only one turbocharger is in operation; during the second sequence which denotes the engine working with high engine speeds, both turbochargers are turn to be used. Alternatively, a small turbocharger could be used for low engine speed operation, and switch to the larger turbocharger only at high engine speeds conditions. In these two cases, the aim and result are the same: changing the effective turbine area to match engine speed working condition and exhaust gas flow as tuned to improve low speed boost, torque and transient response[3].

b) Pressure wave supercharging

In the case of pressure wave supercharging, as its name implies, pressure waves are applied in the manifolds of intake and exhaust system, in order to pressurize the intake charge. In a circumstance where two fluids with different pressures are brought into direct contact in long narrow channels, equalization of pressure turns out to occur faster than mixing[3].

The main component of the Compound supercharger is a cylindrical rotor, which requires a number of the necessary long narrow channels around the circumference. To keep the rotor speed proportional to engine speed, the rotor should be belt driven by the engine crankshaft. The rotor itself dose not provide compression function so that the power consumption by the rotor is minimal. When the rotor is rotating, each individual unit opens and closes in turn, passing through the inlet and outlet ports of intake system and exhaust system[4]. When the cell reaches the exhaust inlet port, high-pressure exhaust gas flows into the air and generates pressure waves to compress the existing air intake. Then the other end of the cell opens to the intake manifold oppositely; the pressure wave continues to force the high-pressure air to flow towards the cylinders. The aperture is closed before the exhaust gases are allowed to flow out. And as both ends of the cell are closed, making the gases become stationary. However, the cell pressure is higher than in the exhaust outlet, so when the cell is opened to this port, the exhaust gases expand out, resulting in fresh air drawn in from the subsequently opened inlet port. Both holes are all closed and the system returns to achieve the initial state.

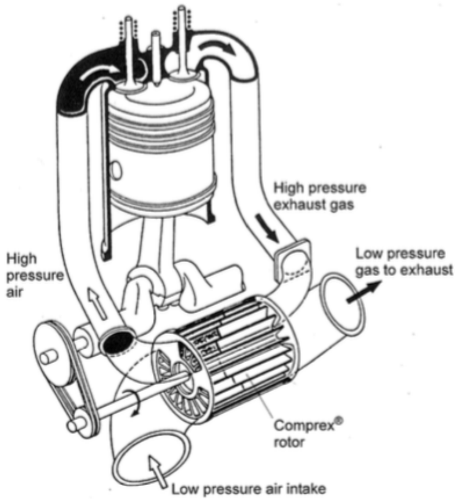

Figure 2.3 Pressure Wave supercharging

c) Mechanical supercharging

Mechanical supercharging is a place providing increased air density and pressure through a pump or compressor. The compressor usually is driven by the engine crankshaft through a gear coupling system or belt-and-pulley system. In the mechanically driven systems, the term supercharger is usually used.

The fluid is displaced by a positive displacement pump, which is in general terms, in a pipe system by trapping and discharging the fixed amount of the fluid in cycle. In the automotive field, the intake air is pumped into the intake pipe inlet to increase the inflating density by pumping the air into the air inlet at a faster rate than the usual intake of the engine. Due to the reason that this is at a settled rate corresponding to crankshaft speed, assuming the transmission ratio is fixed, the volumetric supercharger can produce almost constant pressurization pressure.

A good transient response could be achieved by mechanical drive, however, the disadvantage is that power is extracted from the functional engine crankshaft output, rather than employing available residual gas energy as with turbocharging. For another side, some of the energy used by the supercharger is restored as recognized as forward pumping work on the pistons, while the exhaust backpressure will also be increased by turbocharger, thus increasing pumping losses and trapped remained residuals.

Dynamic compressors consist of centrifugal for radial flow and axial compressors; but for the purpose of automotive supercharger usage, the centrifugal type is the most common type at present. A centrifugal compressor works by accelerating the intake air to a high velocity, and then this velocity is converted to pressure by way of diffusion [4]. The compressor speed is increased with the pressure produced by the compressor consequently. Therefore, under the fixed ratio, the pressurization of the mechanical driven centrifugal supercharger increases with the increase of the engine speed, which makes it not ideal as the automobile engine. The advantage of centrifugal turbochargers is that they are usually smaller, lighter and functional to produce higher pressure ratios than their positive displacement opposite side. Besides that, although the increase in engine speed profile may be correctly perceived as a disadvantage, it may allow the use of higher compression ratios in the case of a gasoline engine.

d) Turbo compounding

In a turbocharger, the utilisation of an exhaust-driven turbine for powering a compressor, by which the density of air introduced into the engine woule be able to increase. Moreover, a direct connection to the functional output of the engine could make it more efficient to exploit the power generated by the turbine.

A turbo-compounded engine is defined as ‘some mechanical linkage and power transmission between the exhaust-gas driven turbine and crankshaft of the engine’[5].

However, It could be possible to use the same project to describe turbine driven generator and therefore will exhaust energy recycling system as electrical power. The mixed configuration of the turbine can be mechanical and electrical. Figure 2.4 shows the possible arrangement of turbo compounding.

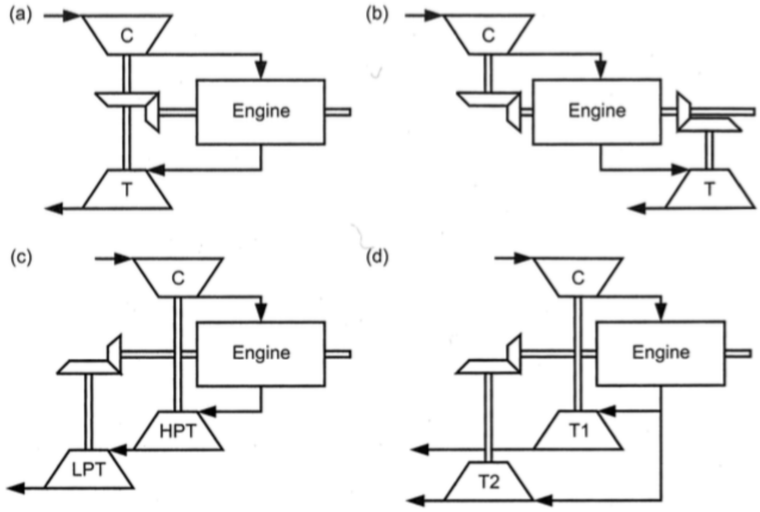

Figure 2.4 Schematics of Turbo Compounding

2.3 Engine Modeling

For describing reality through a model, there are numerous methods. Different approaches are different in both accuracy and structure. The chosen method of modeling basically depends on the particular situation and especially the field of application. When considering the engine modeling, two main approaches can be found : Cylinder-by-cylinder engine approaches and mean value engine method. The first one describes each cylinder individually and generates a torque signal for each individual combustion pulse present derived from engine geometries, which is useful for improving and optimizing the engine performance development aspect. The last method – mean value engine model defines number of cylinders as one, which occupies whole displacement volume. Its main considered aspects are dynamics of speed, engine torque, and pressure build-up in the inlet and exhaust manifolds. The average value over a cycle is used to model the fluctuating flow.

For the development of control outline, the engine modeled by mean value method in zero dimensional are utilized diffusely because of their simplicity and low simulation throughput. As the subsystem is influenced more lighter by the piston reciprocating movement than on combustion process, for dynamics of crankshaft and air induction system of engine, the utilization of the mean value models are accurate enough. The drawback is that it doesn't provide the particular knowledge of combustion occurred in cylinder, for example, pressure of in cylinder gas, temperature of in cylinder gas and signals denoted for ionization. The latter one would be a key parameter used in closed-loop combustion control, in the mean time the in-cylinder pressure rise is a important indicator for developing the knock control by detecting the engine knock.

As for the other modeling approaches, there are many methods that can be used to determine the model. The most common method is physical equation, which theoretically describes the system creating a general model working for many operation areas. Another method used in common is entirely based on measurement. The data measured is stored as a form of two, sometimes three or more, dimensions, which depends on the input signals. The exact results are usually provided by the measurement method which could directly and originally generate by the physical engine model.

2.4 Engine management system

The two main active focus of engine research are promotions in increasing fuel consumption performance and reducing emission. In order to fulfill the pressing emission regulations and claim for better fuel performance, the progressive control techniques for engine control are developed. It is of great importance to reduce emission and improve the fuel consumption performance while compromising the reliability and consolation riding problems. Engine design stage should always involve the design of controlling, as it is one of the most complicated issues in the system [6]. An effective encompassment of the automobile engines with the main soul of mechatronic systems could provide the emission levels, fuel economy and

improved performance, thanks to an abundance of application of actuators, sensors and electronics as well as control systems based on microprocessor.
Nowadays, the classical mechanical approach has been replaced by the new method of engine-control missions, which is achieved by the electronic control systems. In this case, the control strategies established in the system affect significantly the performance of engine including power, torque, fuel-consumption and emission, etc.

The driver making a action to control the vehicle basically based on the demanded output. The engine management system is designed to provide the demanded value of the engine working condition. The parameters, such as sparking, air-fuel ratio, speed at idle condition and other variable like valve timing or another complicated parameters are desired to be controlled. By controlling these characteristics, the emissions could be reduced and the efficiency and performance of the engine could be enhanced.

There are different kinds of sensors with actuators inside the engine management system. The actual time working parameters of the engine is checked by the sensors and the electronic device involving in the engine operation such as fuel injector, throttle valve and spark, are controlled by the actuators. Considering the modules within the system, some different modules consorted with the module used for torque controlling would be controlling module concerning about: air-fuel ratio (AFR); idle speed; electronic throttle; ignition timing; knock; diagnostic and so on.

Except these normal modules, there would be some other modules recognized as other section of the control modules in an actual production vehicle engine management system, like camshaft control, EGR, turbocharger, post-processing of exhaust gas.
The basic section overall structure of engine control system would be the torque control module. The torque control module is the core module to which the other modules are operating in parallel, for the purpose of producing the output indicators as desired by the driver. The output of the engine to generate the demand torque is accomplished by the coordination of torque control module and other module. The

manipulation of various parameters like position of intake valve, time of ignition, duration of injection make the overall torque reference value realized.

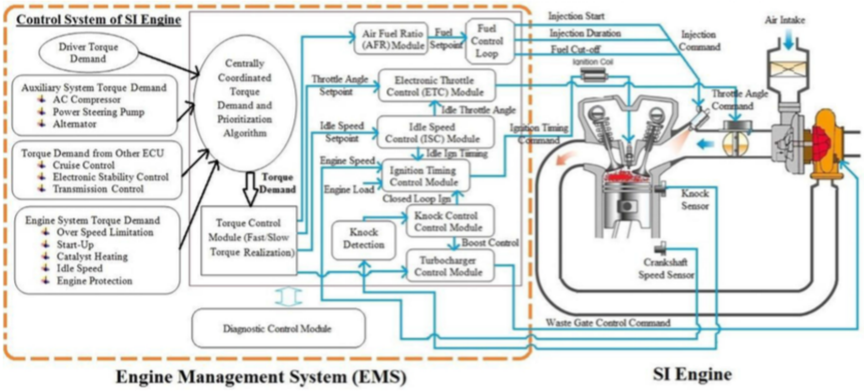

Figure 2.5 Schematic of Engine Management System

a) Torque based engine control module

The control strategy based on the engine torque is suitable to meet the increasingly complex integration of control system of vehicle and engine. It can easily interact with torque interfaces of external system, like transmission, traction control. This control module of engine management system can transform the all inputs into the engine torque variable. The torque variable is recognized as the main connector between the engine control unit and other functions of vehicle control system[7]. The engine torque control module give engine actuators suck as throttle position, cam phase positions, spark advance, an opportunity to realize torque demanded. The demanded torque could be determined by the driver or vehicle subsystem.

When the driver changes torque demand by changing accelerator pedal, torque value is transformed as a set point of torque, throughout the transcriber, which is the interface between the driver and the control unit. The target of it is to translate the demand produced by changing the position of accelerator pedal. The potentiometer in accelerator pedal produces an electrical signal and this electrical signal equals to the demands of torque from the driver decision.

A pedal map stores the torque request from driver. From that map, the values could be interpreted into a demanded torque request as well as taking the other external demand into consider, depending on the position signal of speed sensor signal and accelerator pedal. The response of the vehicle corresponding to the pedal position can be offhandedly influenced by changing the pedal map as the torque demand is the only interface between the accelerator pedal position and the engine control strategies[8].

The system of engine torque control is composed of feed-forward and feedback subsystems. The system offers performance control in both steady state and transient state. The first subsystems could calculate the desired actuator positions, in which engine can generate torque as demanded. While last subsystem could use the estimated torque to rectify feed forward subsystem. The friction, accessory loads and pumping losses are subtracted from working torque during the conversion from desired torque by torque control module block. The look-up table is used to import the torque loss, which relies on engine speed as well as temperature of engine. The pumping loss is also recognized by a form relying on intake charge as well as engine speed. In consequence, the caused torque as requested is alternated as useful torque-impacting control parameters according to control modules, such as injection time as well as injection deviation in case of torque reduction, the variation of throttle angle, last but not least waste-gate bypass valve used for turbocharger control, if equipped. It should be noticed that the throttle system should be considered as an electronic throttle controlled.

As to set-point of torque, the subsystem modes of control system, such as air-fuel ratio and ignition, using their individual algorithms to determine fuel amount injected, air mass flow rate and optimum spark advance for the purpose of acquire torque as desired. Then the relevant signals are transferred to the modules used to control actuators, which is recognized as driver circuit. Actuators receive activation signal from driver circuit. The signal of activation must actuate the needed actuators like spark plug, fuel injectors and intake air throttle [9]. Therefore, in order to accomplish the torque as required, the different actuators, such as throttle, spark plug, injector, needs to be managed respectively.

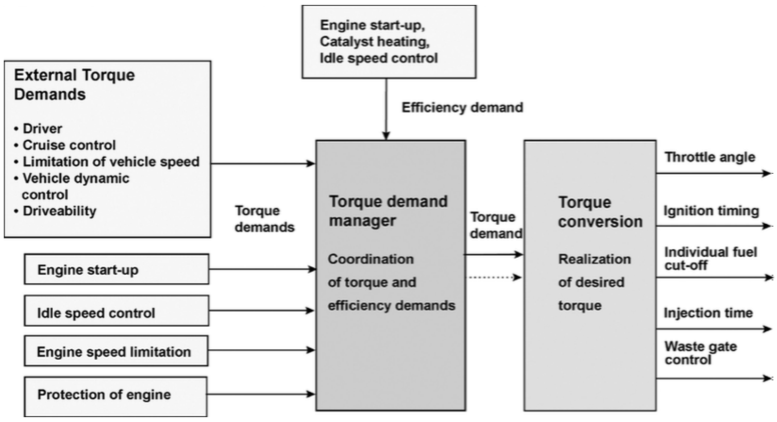

Figure 2.6 Torque Based engine control System

b) Air-fuel ratio control module (AFR control module)

Another important approach of managing the engine operation is air fuel ratio control module. The air-fuel ratio keeps changing in accordance with the torque demands generated from the torque formation, taking the engine requirement, such as air conditioning or warming up of catalyst, and vehicle requirement, like transmission control and cruise control, into account. For example, when considering the three way catalytic converter used in the after treatment system, since the three way catalytic converter reaches optative performance exclusively during the engine operating condition is in a narrow range about the stoichiometric air-fuel ratio. Therefore the air-fuel ratio mode has to stabilize the air-fuel ratio in a stoichiometric statu to ensure the conversion efficiency of the three way catalytic converter remaining maximum. For a better explanation in another word, the air fuel ratio short excursions can be permitted if only they do not overcome the capacity of allowing interval and the mean deviation.

Fuel film compensator, mass air flow estimator, air fuel ratio observer and corresponding controller are the major components of the Air-fuel ratio control system. These components make use of all the information sensed and generate the suitable pulse width of injectors

The mass air flow estimator is used to meter the air mass inducted into cylinders as well as to measure the correct amount of fuel, due to the reason that basic fuel quantity required for maintaining stoichiometric combustion on the basis of the intake flow rate and pressure. Generally two types of sensors are utilized to estimate the air amount of an SI engine: Manifold absolute pressure sensor as abbreviated as MAP and mass air flow sensor as abbreviated as MAF. For the purpose of calculating the intake air flow introduced into cylinders and in this way make calculating fuel demands possible, the manifold absolute pressure sensor applies speed-density method. This method links the manifold pressure gathered by the sensor and the temperature of charged air with volumetric efficiency of engine, which is known from look-up table. The density of intake air flow is estimated via temperature of intake air and pressure of manifold, therefore, as the density of inlet charge is a given number, the air fuel ratio mode could obtain the amount of fresh charge expected to be introduced under the engine operating condition specified by speed and MAP according to the equation:

$$W_{cyl} = \eta_v \frac{n_e}{2} V_d \frac{P}{RT}$$

Where W_{cyl} is the mean value of air introduced into the cylinders, η_v is the volumetric efficiency of the engine condition. V_d is the engine displacement and n_e is the engine speed. Obviously the P is the manifold pressure and T is the intake manifold temperature. η_v is the volumetric efficiency under different engine condition. This calculation should be accomplished in the form of volumetric efficiency and should be stored in control unit in the form as map after calibration. In Mass air flow sensor method, air flow rate is estimated in the intake manifold directly since the mass air flow sensor is a hot wire anemometer commonly, which could measure the flow in the cylinder with high accuracy only under steady condition [9]. During the transient operation, an additional estimator to correct the input could be introduced to rectify the final value obtained as air flow induced into cylinder.

Fuel film compensator is a part of air-fuel ratio control system. This compensator balances the amount of fuel stored and released in the oil film by changing the amount of fuel injection. It should be used inside port fuel injection system, since partial fuel amount does not immediately enter the cylinder during injection at the intake port. The fuel would trench on the port wall, on the reverse side of the intake valve where there would be a fuel film forming. This fuel film causes diversity between the fuel injected amount with the fuel induced into the cylinders [9]. In case of not compensating this lag as difference, there would be major peaks in the air-fuel ratio response. Because when the inlet valves are open, the injected fuel is not in gaseous state completely, so it is necessary to describe the model of the mass flow of the fuel into the cylinder. The fuel mass balance is estimated by the fueling model as a function of the mass ratio of the injection fuel as input and the fuel flow induced into cylinders in the form of liquid as output, as a compensation action to balance the fuel film mass.

Air-fuel ratio observer acquires the information of control circuits concerning the air fuel ratio in respective cylinder, performing real time observation of air-fuel ratio. Most of these observer methods rely on the upgrowth of a simplified model for different aspects. This aspects involve exhaust traffic delay, dynamics effect of sensors and air fuel mixing appearance. In this air-fuel ratio observer, the communication requirement is the equivalence air fuel ratio of single cylinder. Therefore the fundamental measurement is offered by the exhaust gas oxygen sensor signal, which is abbreviated as EGO sensor. For the EGO sensor, the essential compensation operation will be executed for the time lag, sensor characteristics and air fuel mixing phenomena by a suitable type. This EGO sensor offers feedback air fuel ratio control information in close loop control, which afterwards is periodically converted to injection time rectification after the information.

The air-fuel ratio controller is introduced to calculate pulse width of the injector by air flow observation. The pulse width is determined by the absolute pressure of the manifold or the mass air flow sensor relative to the driver's demand and engine speed [10]. The controllers are based on the designing feed forward and feedback control module by the means of establishing look-up table, estimating dynamics of air path and fuel filling system with adequate reparation. The quantity of fuel, which should be induced into cylinders to accomplish the air fuel ratio stated advanced as for the torque requirement, is determined by the predicted air mass. The necessary injector pulse width command is estimated by the fuel filling system model on the basis of fuel vaporization, injector characteristics, pudding dynamic of fuel and entrainment dynamics. The stoichiometric air fuel ratio could be reached in case of unaltered throttle operation by the application of the feed forward fueling strategy if the intake air system and fuel filling system models are precise. Although, major part of controllers for fuel injection systems in the actual production vehicle is composed of a closed loop control or open-loop control. The open loop control is feedforward employing lookup table. The closed loop control is feedback with PID controller. The proportional-integral-derivative controller works based on a gain scheduled approach with simple structure, few tuning parameters, absence of system model and robust performance among wide range of operation conditions[10].

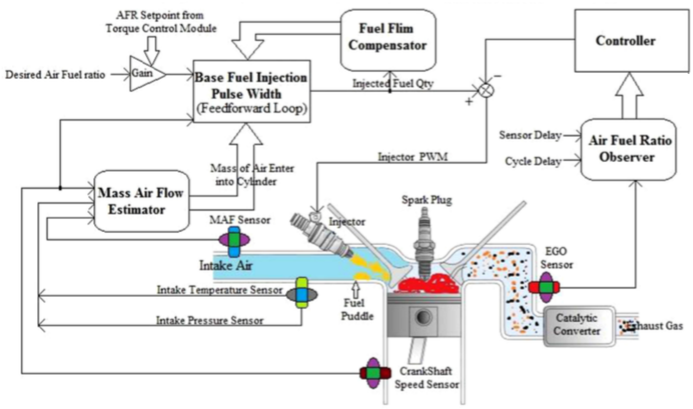

Figure 2.7 Air-fuel Ratio control System

c) Electronic throttle control module (ETC module)

In spark ignition engine, the amount of intake flow, which is introduced into cylinders, is controlled by throttle valve in the inlet system, as well as the cylinder charge. The cylinder charge determines the output power from the engine and torque. It is assumed that the throttle valve of the mechanical butterfly valve is directly connected to the accelerating pedal and throttle body, and the stepping motor is used as an idle actuator, in traditional mechanical throttle driven technology. The driver operates the pedal as a control facility in accordance with the demand for torque and engine power, controlling air flow through intake throttle. In the mechanical condition, the idle intake bypass valve could be controlled by using a solenoid or a stepper motor in engine management system. The electronic throttle system has replaced the conventional mechanical throttle control for multitude of technical benefits. Within the injection electronic controlled system, the throttle valve in controlled electronically, thus the accelerating pedal is connected to the throttle facility not in the mechanical way. The ETC module just stimulates the engine torque demand from driving action via an accelerating pedal sensor to the engine management system. Basically the intake valve stays unchanged with this different servo motor operating the butterfly valve. Engine management system controls the throttle opening angle on the strength of the control mode of torque as the required signals from the accelerating pedal position sensor and requirements of additional systems. Furthermore, the position sensor of throttle is combined into the throttle subsystem to determine throttle valve actual position. On the basis of the signal from this throttle position sensor, the electronic throttle retain the closed loop control as to achieve the throttle opening angle demand from the torque control mode.

The torque demand could be generated by driving action and external additional subsystems (traction and cruise control for example). The required values of torque are determined as a set point for the engine by the main controlling mode of torque. The desired intake mixture charge needs to determine at the beginning to obtain torque needed and the caused value. This value indicates the intake mixture charge as target, which is essential to accomplish the required torque.

In case of turbocharging engine, as for the represented setpoint of torque, it is necessary to discuss captured air amount and recirculated exhaust amount. Therefore the intake air system control could be divided into air mass control (waste gate and throttle valve) and the recirculated exhaust gas mass control. The required mass of intake flow is determined by the predefined lookup table on the basis of speed of engine and torque desired set point. The set point of throttle position is calculated on the purpose of achieving the intake mixture charge, on the basis of divided physical model of intake system function. This electronic throttle control module transferred the information from the position of accelerator pedal to different relevant actuators to operate the throttle opening or closing independently.

The throttle control system defines the necessary voltage for controlling the motor by means of respective pulse width modulation signal. As a result, this throttle receives the signal and the DC motor with brush or a gear mechanism producing the needed torque to enable the throttle plate to set point angle. Nevertheless, the performance of ETC module is deteriorated because of friction in servo motor in small-signal operating condition, causing a slow response. For the sake of improving the performance under the small signal division working method, controllers extend to demanded friction. It is common to use PID controller in vehicle EMS production area, enabling high validity and accurate performance in controlling.

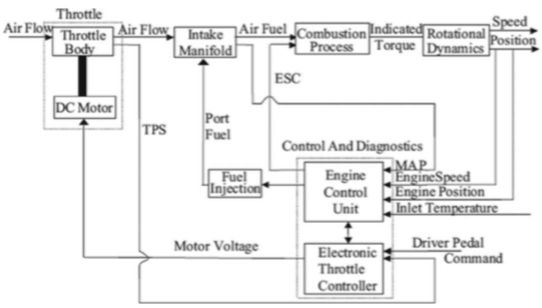

Figure 2.8 Electronic Throttle Control Module

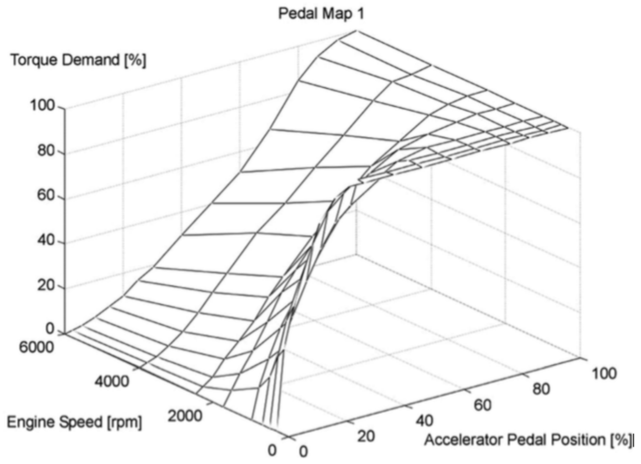

Figure 2.9 Pedal Map Example

d) Idle speed control module

The target of this system is quite simple. The idle speed control is used to maintain the speed of engine approximate to the defined value, which is known as selected target idle speed, preventing motor to stalling while interference load is added or subtracted. The interference loads could be caused by kinds of method, such as battery charging, compressors used for air conditioning, headlamp, electric windows, battery charging and power steering or complementary electrical accessories which could influence the engine speed under idle speed operation condition. In that module, the controller has only to control over the fuel, air, sparking time and recirculated exhaust gas. The intake flow and ignition timing influence the idle speed mostly, because there are two main factors controlling the engine speed: the throttle, which manages the air-fuel mixing and charge amount, as well as spark advance. The control process utilizing the spark advance system has a quicker response than utilizing the intake air system. Therefore normally spark advance is firstly used as core input for controlling. Subsequently, when the intake input starts to govern the engine speed, the timing value of spark advance returns to numerical value. To simplify this control strategy, the two control signals are used in parallel and should be aware of each other. A desired set point value is relative to the spark advance. Therefore, during the changing in other loads, it is possible to implement the idle speed control by adjusting the air fuel mixture needed to be introduced into cylinders.

The set point of control system under idle speed condition is determined by the different torque interfaces to the engine under idle speed condition. Only predictable torque as load is related through the feed forward lookup table of different interruption, because engine control unit is aware that the accessories are switched on. After estimating the load torque by the estimated interfaces, by defined spark timing and air-fuel ratio, the intake air mass could be calculated to remain the idle speed at predefined set point.

Time lag exists due to the procedure of inlet charge controlling. This response and stability has to be improved due to the combustion lag, engine identifying lag, interfaces with external torque, passage delay and additional associated issues in inlet charge controlling system. These kinds of time delays should be compensated by means of appropriate compensated model or feed forward methods. Accordingly, a typical idle speed control module consists of a controller maintaining idle speed set point, load estimators for idle speed and time lag compensators.

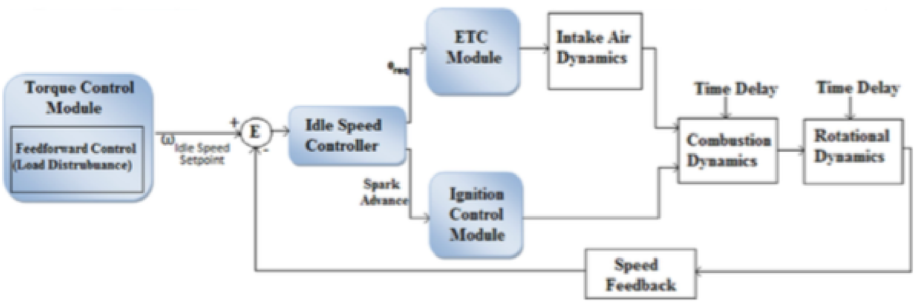

Figure 2.10 Idle Speed Control Module

Chapter 3 Engine Modeling Using Mean Value Method

3.1 Introduction

As discussed in the previous chapter, downsizing is a solution to reduce the engine consumption and turbocharger is used to keep engine performances in spite of a lower engine capacity under steady-state and transient conditions. By using the turbocharger in a downsized engine, it is possible to have intense density of engine power and gain the capability to overcome different needs under various engine working environment in the same time. However, heavy engine knock would rise to appear due to the rising rate of charge pressure and flame temperature. In consequence, the external cooled EGR gas is introduced to control the knock phenomena in a certain level. Additionally, it is suggested to adopting variable valve timing technique in order to adjust the compression ratio which could suppress the engine knock at high load. Another effective way to decrease engine knock phenomena is using flex fuel like ethanol instead of gasoline.

To accomplish these technologies, the desired engine control strategies are required to be sophiscated. On the basis of the development of the control strategy and validation, a control oriented engine model is needed. The controlling method based on model can operate the engine with maximum efficiency. The model must have enough accuracy, including detailed engine dynamics and could be simulated in Simulink. It is particularly important to furthest improve the performance as well as obeying the administrational and environmental legislation in the controller design and development stage. Besides that, it could be confirmed that accomplishing the engine model analysis earlier on prototyping the engine physical model is a solid approach to save cost and time of development and research procedure [11].

In this chapter, a mean value engine model is introduced and accomplished. This resulted model is average combination of higher simulation cycle models and simple phenomenological transfer function models, which could be used for both simulation and control purposes [12].

3.2 Mean value method and GT-Power

The objective of mean value models is to predict the mean value of the gross external engine variables and the gross internal engine variables with moderate accuracy, both in steady state and transient situations [12]. The high accurateness can be familiarly accomplished by assuming with more complex models. This description has much longer time scale than a single engine cycle and much shorter time scale than the time required for a cold engine to warm up (1000 cycles or so)[10]. The time resolution of the model is just sufficient to describe precisely the variance of the average numerical value of engine characteristics changing most rapidly [12]. It is divided into two types of time scale: instantaneous and time developing. The first scale involves a process of rapid balance, which reaches equilibrium swiftly. This process is composed of algebraic equations describing various action likes flow passing through throttle valve. The differential equation, such as the manifold pressure equation, proves that the development process takes a period of one to three orders of magnitude in the engine cycle.

In the development of control strategy, the average value of zero dimensional simple engine model and Simulation of low throughput led to the widespread use of the engine model, the engine model for engine crankshaft dynamics for air handling systems or accurate enough, because of the impact of the combustion process influence the reciprocating movement of the piston of the system on the small. However, the lack of information about the detailed combustion process of the engine becomes the defect of the mean modeling method. For example, the temperature, the

ionization signal applied for controlling combustion and gas pressure inside the cylinders as a indicator of the detonation detection of the engine.
For the prospecting of engine combustion process, the phenomena, such as thermodynamic, formation of pollutant, heat transfer, and fluid flow, could be described by multi-region, three dimensional computational fluid dynamics models, which is abbreviated as CFD models, by comprehensive chemical kinetics. For real time hardware-in-loop simulations, a type of combustion model is necessary to be accomplished, whose average complexity is in among the CFD models and mean value models with time based method.

Normally the engine system could be divided into different subsystem such as the fuel system, valve system, exhaust gas recirculation system, ignition system, and turbo-compressor system. The engine valve actuation subsystem employs a camshaft to open and close poppet type intake and exhaust valves. The camshaft is mechanically connected to the crankshaft, to ensure synchronized motion between the intake and exhaust valves opening/closing motion and the piston motion. A new system without camshaft has been proposed to improve the flexibility of the valve actuating system with an electronically controlled actuator. The control engine fuel subsystem is mainly realized by the wall wetting phenomena of the port fuel injection to achieve the required air- fuel ratio and engine output torque. While for the direct injection fuel system, the spray and mixing motion in cylinder are two important factors for engine control.

The control-oriented engine model has to be simple with required engine dynamics to develop and verify the control strategies. Generally the engine model can be divided into three portions: mean value gas flow model, crank-based combustion model, and periodic event based model. The high fidelity models could be realized as commercial software like GT-Power. Also the model could be recognized as consultation models for simplifying the development of control strategy and verification purposes.

The commercial software, GT-Power as designed especially for automotive powertrain model and simulation, is diffusely adopted in the vehicle industrial field. By using the object-based design, users are allowed to model an engine part by part and then module by module. This software mainly use the foundation of one dimensional fluid dynamics. This fluid dynamics model could describe the motion of fluid and heat transfer process in tube as well as other fluid components of system. The ability of this software to provide accurate stable condition simulation results is acceptable, however, considering transient simulations the ability is relatively low.

In this chapter, the mean value engine model and the GT-Power model are introduced and the Simulink model is used to verify the control strategy of engine discussed in the following chapters.

3.3 Mean value gas flow model

The averaged dynamic behavior of each engine subsystem could be described by the mathematical subsystem models, even if the system could be described as functions generated during reciprocating motions. The variable quantity of parameters considered in these functions are time t.

3.3.1 Valve model

In view of same physical characteristic, the engine valve model described below could be applied to multiple actuators such as the intake throttle, the exhaust gas recirculation (EGR) valve waste gate. For the hypothesis, the spatial effects of the connecting pipes are ignored. The isentropic expansion should be considered for characteristics of thermodynamic[13]. The valve model managing equation would be:

$$m_v = K_d S_v \frac{P_{up}}{\sqrt{RT_{up}}} \psi\left(\frac{P_{down}}{P_{up}}\right)$$

where,

$$\psi(x) = \begin{cases} \sqrt{2x(1-x)} \\ \dfrac{1}{\sqrt{2}} \end{cases}$$

If x is bigger than 0.5 and smaller than 1, the equation of $\psi(x)$ is the upper case, if x is less than 0.5, the lower case is considered. To explain the symbol, K_d is the discharge coefficient of valve; S_v is the open area of valve. It should be noted as K_d and S_v are relevant to valve opening angle θ_v. T_{up} and P_{up} are respectively temperature and pressre of valve upstream; and the mass flow rate across the valve m_v could be obtained eventually. The valve model simulated in the Simulink is shown:

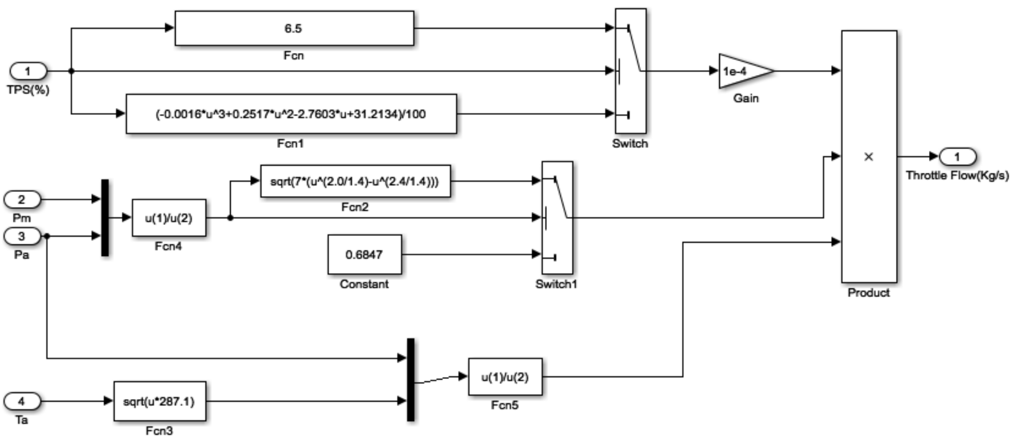

Figure 3.1 Valve Model accomplished in Simulink

3.3.2 Filling dynamic of manifold model

The manifold models are mostly utilized for inter compressor, inter turbine pipes, intake and exhaust manifolds. It is assumed that the behavior in these manifolds is an adiabatic process. The thermodynamic states would be even across the whole division of manifold. In each engine cycle of the mean value model, the manifold temperature should be averaged. The equation for filling dynamics behaviors of manifold would be [14]:

$$\frac{dP_m}{dt} = \frac{T_m R}{V_m}(\dot{m}_{in} - \dot{m}_{out})$$

Where P_m is the manifold pressure. V_m is manifold volume, while the $\dot{m}_{out}$ and $\dot{m}_{in}$ respectively represents outlet and inlet air mass flow rates.

The manifold model simulated in the Simulink is shown:

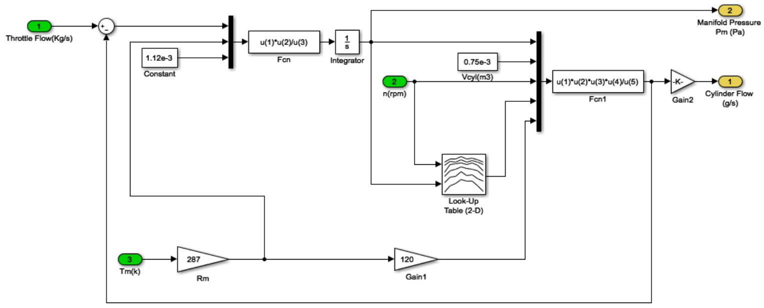

Figure 3.2 Manifold Model accomplished in Simulink

3.3.3 Crankshaft dynamic model

If a rigid crankshaft is assumed, the equation could be derived on the basis of the Newton theory as [14]:

$$\frac{dN_e}{dt} = \frac{60}{2\pi}\frac{M_e - M_l}{J_e}$$

where M_l and M_e are the load and brake torque of engine; J_e is the engine crankshaft rotational inertia.

3.3.4 Turbine and compressor models

It is usually to use energy conservation equations to model turbochargers based on turbine maps and steady-state compressors. If the turbine mapping equations, including turbine mass flow and shaft speed, do not require a reduced form, different turbine mappings for each inlet pressure and temperature combination are required.

To clarify the parameter used in the following equations to describe the turbine and compressor dynamics, $T_{in/out}$ and $P_{in/out}$ are either inlet/outlet temperature and pressre of turbine or compressor; N_{turbo} is the rotating speed of shaft dimensioned in rpm, while thermal efficiency is denoted as η.

a) Turbine mapping:

It is commonly used f_{turb} *and* f'_{turb} to symbol turbine maps. The turbine maps are introduced to calculate the reduced turbo mass flow rate m_{turb} and η_{turb} as thermal efficiency. The turbine maps are determined according to speed of turbo shaft and pressre ratio across the turbine. The actual mass flow rate could be obtained by equation [14]:

$$m_{turb} = f_{turb}(\frac{P_{in}}{P_{out}}, \frac{N_{turbo}}{\sqrt{T_{in}}})\frac{P_{in}}{\sqrt{T_{in}}}$$

and

$$\eta_{turb} = f'_{turb}(\frac{P_{in}}{P_{out}}, \frac{N_{turbo}}{\sqrt{T_{in}}})$$

b) Compressor mapping

For the compressor, the principal is similar with turbine mapping case, the equations should be [15]:

$$\frac{P_{out}}{P_{in}} = f_{comp}(\frac{m_{comp}\sqrt{T_{in}}}{P_{in}}, \frac{N_{turbo}}{\sqrt{T_{in}}})$$

and

$$\eta_{comp} = f'_{comp}(\frac{m_{comp}\sqrt{T_{in}}}{P_{in}}, \frac{N_{turbo}}{\sqrt{T_{in}}})$$

c) Temperature calculation:

The turbine or compressor outlet temperature could be derived on the basis of Clapeyron equation since the expansion of gas, as well as compressing of gas, for components of turbocharger are assumed to be isentropic [16]:

$$\frac{T_{out}}{T_{in}} = (\frac{P_{out}}{P_{in}})^{(\frac{k-1}{k})}$$

Nevertheless, in the actual condition, both expansion and compression are not isentropic; due to existences of thermal efficiency, more enthalpy is left over in the exhaust, causing the result obtained from the equation above less than the real temperature of outlet. While the difference is quite small respect to the numerical value. In hence, the equation is appropriate.

d) Power calculation

Considering power produced from turbine and power required by the compressor, denoted as E_{turb} and E_{comp} respectively, which could be calculated as [17]:

$$E_{turb} = m_{turb}C_p\eta_{turb}T_{in}[1 - (\frac{P_{out}}{P_{in}})^{(\frac{k-1}{k})}]$$

and

$$E_{comp} = m_{comp}C_p\frac{1}{E\eta_{comp}}T_{in}[\left(\frac{P_{out}}{P_{in}}\right)^{\left(\frac{k-1}{k}\right)} - 1]$$

e) Power balancing of shaft equation of turbocharger

Since power emerged by turbine and power required by the compressor are known, the difference could be represented as power balance as [18]:

$$E_{turb} - E_{comp} = N_{turbo}J_{turbo}\frac{dN_{turbo}}{dt}$$

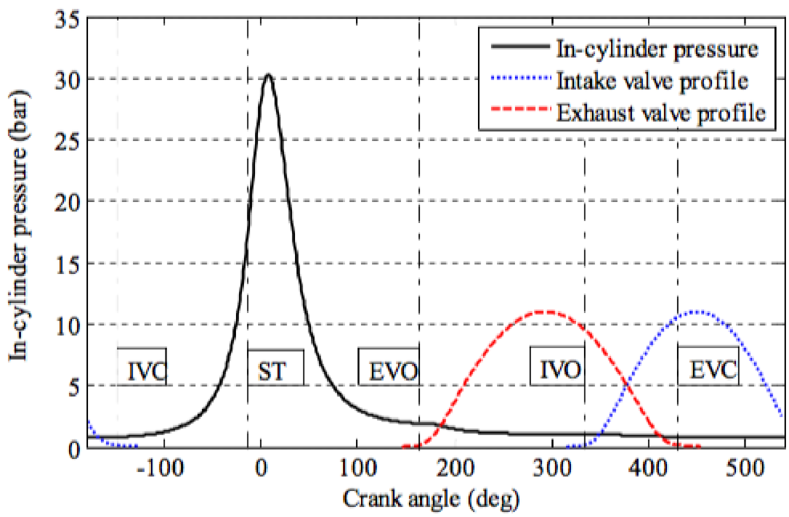

Figure 3.3 Stage of pressure varying [19]

The turbine and compressor model simulated in Simulink are shown:

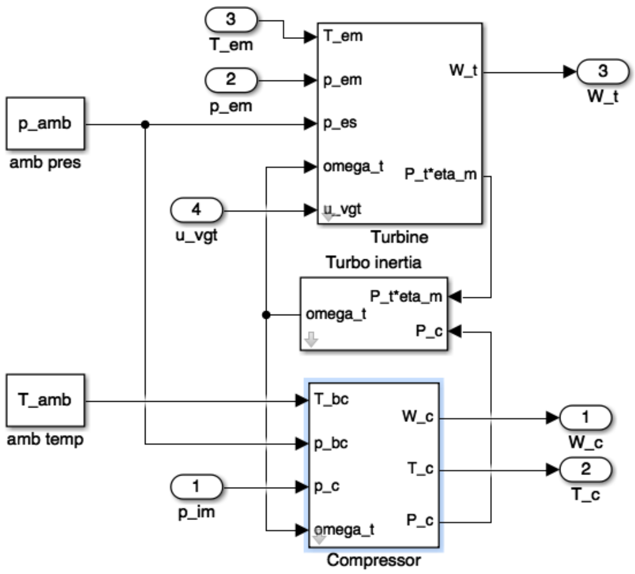

Figure 3.4 Turbocharger Model in Simulink

3.4 Model of SI combustion using crank-based method

The objective of combustion simulation is to tie the trapped cylinder mixture properties with combustion characteristics. The properties of in-cylinder gas are mixture pressure, mixture temperature and trapped EGR gas mass and the characteristics of combustion should be burn duration, mean effective pressure and knock.

In this combustion model, combustion related parameters are renewed every crank degree (ex. temperature and in-cylinder gas pressure). However, some other parameters, for instance air fuel ratio and IMEP, are renewed once only at particularly defined crank position every engine cycle. This given crank position indicates a periodical dynamics of the combustion process. In general, other than in the mean value model, where all the parameters manifest as continuous functions of time t, all these parameters are discrete functions of engine crank position.

The crank based modeling approach could also acquire more precise modeling results, since the entire combustion process is separated into different combustion phases, which are linked with certain events and serve as a function of crank position. The combustion phases is composed of five parts : IVC (intake valve closing), IVO (intake valve opening),EVO (exhaust valve opening), EVC (exhaust valve closing) and ST (spark ignition timing).

The spark ignition timing sets the start point of combustion, which should end with exhaust valve opening. This duration between EVO and IVC indicates the gas exchange process and between IVC and ST is compression process. These two processes preparing the gas-fuel mixture, are also important for combustion process.

a) Gas exchange process model

It should be started talking about the gas exchange from the gas exhaust phase. When opening valve of exhaust system, the mixture inside the cylinder expands. This expansion should be considered as isentropic expansion in cylinders, exhaust ports and manifold. Assuming the pressure of mixture inside cylinders equals to the exhaust manifold absolute pressure, then the temperature of mixture inside cylinders could be obtained by [20]:

$$T(\theta_i) = T(\theta_{EVO})[\frac{P_{EM}}{P(\theta_{EVO})}]^{\frac{k-1}{k}}$$

where P_{EM} is the exhaust manifold absolute pressure and θ_{EVO} is the crank position when exhaust valve is closing.

Subsequently the intake valve opens, while the exhaust valve is still opened, this stage is called overlapping phase of valves. At this stage, the intake valve starts opening, in the mean time exhaust valve stays closing. This flow dynamics phase is quite complicated. To simplify the modeling process of this phase, it should be assumed that the pressure of gas inside the cylinders is equal to the average value of pressure of intake manifold and exhaust manifold. Then the gas temperature could be obtained by [5]:

$$T(\theta_i) = T(\theta_{IVO})[\frac{P_{ex} + P_{in}}{2P(\theta_{IVO})}]^{\frac{k-1}{k}}$$

in which P_{in} indicates the pressure of intake manifold.

At exhaust valve closed, the mass of residual mixture could be obtained by law of ideal gas [5]:

$$M_r = \frac{P(\theta_{EVC})V(\theta_{EVC})}{T(\theta_{EVC})R}$$

For the phase from exhaust valve closing to intake valve closing, the fresh charge is induced from intake system to individual cylinders. It should be noticed that the pressure inside cylinders is mostly affected by intake manifold pressure with a volumetric efficiency. The volumetric efficiency could be gathered as a table function of speed of engine and load.

$$P(\theta_i) = P_{IM}\eta_{in}$$

where η_{in} is the volumetric efficiency of intake system of the engine. The temperature of mixture inside cylinders could be determined as [5]:

$$T(\theta_i) = T(\theta_{EVC})[\frac{P_{IM}\eta_{in}}{P(\theta_{EVC})}]^{\frac{k-1}{k}}$$

As explained in valve overlapping phase, the total mass of charge mixture introduced to the cylinders for compression and combustion strokes at the period of closing the intake valve could be [7]:

$$M_t = \frac{P(\theta_{IVC})V(\theta_{IVC})}{T(\theta_{IVC})R} = \eta_{in}\frac{P(\theta_{IM})V(\theta_{IVC})}{T(\theta_{IVC})R}$$

Then the remaining phase of gas exchange process is the compression phase without combustion, the pressure and temperature of mixture inside cylinders are on the basis of ideal isentropic gas law [12]:

$$P(\theta_i) = P(\theta_{i-1})[\frac{V(\theta_{i-1})}{V(\theta_i)}]^k$$

$$T(\theta_i) = T(\theta_{i-1})[\frac{V(\theta_{i-1})}{V(\theta_i)}]^{(k-1)}$$

where $V(\theta_i)$ is the volume determined by crank angle θ_i given as the equation:

$$V(\theta_i) = [\frac{1}{2} + \frac{1}{r-1} + \frac{L}{S} - \frac{\cos(\theta_i)}{2} - \sqrt{\frac{L^2}{S^2} - sin^2(\theta_i)}]\frac{\pi B^2 S}{4}$$

r is compression ratio, s is piston stroke, L is connecting rod length and B is piston bore.

b) Spark ignition combustion model

In spark ignition combustion mode, any desired crank position spark timing could control the start of combustion. The S-shaped Wiebe function could represent the mass fraction burned of induced fuel after spark timing [4]:

$$x(\theta_i) = 1 - \exp{[-a(\frac{\theta_i - \theta_{ST}}{\Delta\theta_{ST}})^{m+1}]}$$

where $\Delta\theta_{ST}$ is the predicted burn duration of SI combustion mode; and m is the Weibe exponent, coefficient a depends on the definition of burn duration $\Delta\theta_{ST}$ and it is a function of m. In this model, m=2 and a=3 is set.

To simplify the combustion process, it should assume that burned charge is uniformly mixed as well as the unburned charge in one zone. Then the combustion process could be recognized as heat transfer action. Hence in-cylinder gas temperature would be given as [21]:

$$T(\theta_i) = T(\theta_{i-1})[\frac{V(\theta_{i-1})}{V(\theta_i)}]^{(k-1)} + \frac{\eta_{SI} M_f H_{LHV}[x(\theta_i) - x(\theta_{i-1})] - \square(\theta_i)}{M_t C_v}$$

Q denotes the heat transfer reaction. The heat transfer should occur among mixture charge inside the cylinder and inner wall of cylinder, representing as just convection exists[22]:

$$Q(\theta_i) = A_c h_c [T(\theta_{i-1}) - T_w]$$

By considering the methods, the complicated thermodynamic process could be predigested as a combination of two processes: volume change as isentropic change and heat absorption of burned mixture. The first process should not consider the heat exchange for each crank degree and the second process should not consider the volume change in an infinitesimal time phase.

c) Engine torque computation

By using a simple integration based on cylinder volume profile and pressure profile, the engine indicated mean effective pressure, which is abbreviated as IMEP, could be determined [22]:

$$P_{IMEP} = \frac{1}{V_d} \sum_{i=0}^{i=719} [P(\theta_i) * (V(\theta_i) - V(\theta_{i-1}))]$$

and $V_d = V(\theta_{BDC} - \theta_{TDC})$ as cylinder displacement.

Eventually, the engine torque output is calculated as[18]:

$$T_e = \frac{60n(P_{IMEP} - P_{FMEP})V_d}{2\pi N_e}$$

where n denotes the engine cylinders number.

d) Fueling dynamic

For the fueling systems, normally there would be two type of injection: direct injection and partial fuel injection. For the direct injection, it is difficult to model the fuel vaporization as well as to model the mixing process of air and fuel vapor. On the contrary, the combustion is less influenced by direct injection in the dynamic aspect. Therefore, some assumption could be made that the overall amounts of fuel direct injected for each cycle are fully vaporized and resulting uniform air fuel mixture.

While considering partial fuel injection fuel, charge mixing inside cylinder as well as vaporization are not ideally finished. The wall wetting phenomena of the fuel spraying on the intake port and on the back of intake valve should be considered [13].

The wall wetting phenomena equation could be demonstrated by [13]:

$$M_{fuel}[k] = \alpha \cdot M_{res}[k-1] + \beta M_{inj}[k]$$

$$M_{res}[k] = (1-\alpha) \cdot M_{res}[k-1] + (1-\beta) M_{inj}[k]$$

where coefficients α and β are index about functions of speed, load and coolant temperature of engine; k indicates the engine cycle number.

3.5 Engine Modeling in GT-Power

GT-Power is designed to be used to simulate all kinds of internal combustion engine. By dragging and dropping objects in the graphical user interface, the model could be constructed with the component database offering a brand range of engine components. Then after linking each component with appropriate logic, it would be possible to define the properties of each component and set up the simulation options. Before running the simulation, the desired output plot could be specified. Sometimes a model of references is needed to describe the detailed object to the program.

The engine used is a single-turbo 4-cylinders spark ignition engine with partial fuel injection and EGR controller. The model is based on the engine with single turbo 4-cylinder partial injection engine. However, the reason why utilizing the single-turbo and bypass control method is to enrich the content of this project and to simulate an engine development period and test the control strategy. The engine profile is in the appendix.

To build the engine cylinder model, the inlet boundary conditions should be defined firstly. Normally the EndEnvironment template (see appendix 1) could be utilized to accomplish that. The boundary condition is defined as temperature and pressure of environment. The piperound component could be used to model intake runner and intake port, as well as the exhaust port and exhaust runner. It should be noticed that to distinguish different parts modeled by same component in software, the knowledge of dimensions, roughness from material, initial state, thermal and pressure conditions should be available. In the software library, some predefined attributes with corresponding values could be used to represent common conditions. The icon of component used could be explained in the appendix. The modeling process of some main subsystems of the engine should be clarified in the following sections.

3.5.1 turbocharger

The turbocharger used is single stage, consisting three main parts for each turbocharger: turbine, compressor and shaft with bearing. The turbine and compressor are mounted on the same shaft and rotate with the same angle velocity. The turbine is driven by the exhaust gas, which contains energy due to the engine inefficiency. The compressor increases the density of inlet air induced into each cylinder. A waste gate controls the boost pressure. The fuel economy of a turbocharger engine is influenced by the same factors as in the natural aspirated engine.

The single turbochargers provide a way to generate high engine output torque during low engine speed working condition. The utilized way of limit boost pressure is wastegate method, which is using a valve that in the case of opened valve, the exhaust gas could bypass the turbine. A feedback path to exhaust system downwards of turbine appears. [14].

The wastegate is pressure controlled by proportional-integral control pressure. A proportional valve produce the pressure, which is smaller than the boost pressure. This proportional valve ensures that the diaphragm is controlled by the boost pressure and inlet pressure of compressor in changing proportions [15]. Electronic system of the engine participates in the controlling of this pressure valve. The bypass valve routes exhaust around the turbine and dissipates pulse energy directly to the environment through exhaust pipe. The pre-loaded spring determines the pressure at which the wastegate actuator opens, making the maximum boost pressure remain constant.
To start building the structure of the turbocharger, the templates should be expanded by importing the parts necessary from the library, such as FlowSplot General, End flow cap and pipe rectangle. In the connections sections from library, the orificeconn components should be predefined as nocond and bellmouth. After dragging the compressor, turbine, shaft, valve for bypass control with corresponding actuator and some pipes, it is necessary to calibrate the intercooler inside the intake system. During this modeling period, the internal specific geometry is not known; therefore, another simple model is introduced to obtain the desired intercooler dimensions from pressure drop and temperature drop effect needed. The model is shown as followed.

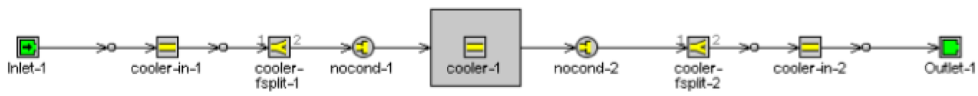

Figure 3.5 Intercooler dimension test model

To adjust the cooler, it should control the pressure drop and temperature drop as difference of inlet entry with outlet outflow. With a certain flow rate, if the pressure drop match the experiment, it means the cooler is suitable for the engine model.

Then to model the turbine and compressor, the volumetric efficiency and performance map of turbine and compressor should be measured. After running the basic engine model to guarantee that valves, manifolds and cylinders are modeled correctly, a engine modeled turbocharger without turbine should be introduced, maintaining the turbine intake condition model as environment condition. The compressor performance could be tested before making engine model more complex. By adjusting attributes of rack as position and array, the compressors geometry could be varied with unique compressor performance map. After running the model and obtain the acceptable results of compressor, the turbine component could be added. Turbine could be added and replace the compressor to finish the testing without compressor, by repeating the same methodology as testing the compressor. Finally, before connecting the components with appropriate logic and ShaftTurbo components, the compressor and turbine should be calibrated in the range of power to get the desired mass flow rate.

The model made in GT-Power is shown as followed:

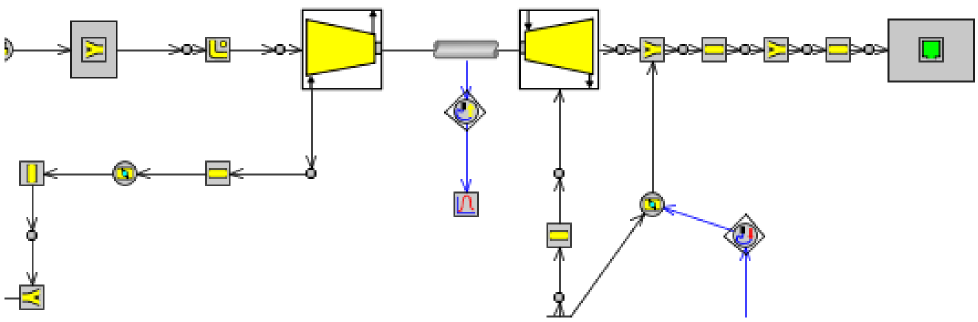

Figure 3.5 Turbocharger Model in GT-Power (see appendix 1 on detail on symbol)

3.5.2 EGR controller

The EGR flow is regulated by valves. In the Exhaust gas recirculation system, the controller is used to determine the amount of recirculation exhaust gas by gathering the engine load and driver demand from the accelerator pedal or intake throttle.

The EGR gas is measured in this system by CO_2 concentration in the intake tank. The exhaust gas recirculation amount in the intake charge is needed to predict the available volume of fresh air inside cylinders. By using the measurement of CO_2 concentration of exhaust gas, the Exhaust gas recirculation amount of intake charge could be calculated, under the assumption as molecules of CO_2 are uniformly disposed inside the exhaust gas. With this assumption, single CO_2 molecule in the intake gas could correlate to a definite percentage of Exhaust gas recirculation. The equation could be explained as:

$$EGR_{intake}\ [\%] = \frac{EGR_{intake}}{Exhaust} * 100 = \frac{\mathrm{CO}_2 intake - 0.04}{co_2}$$

The EGR controller used in this model is shown as followed:

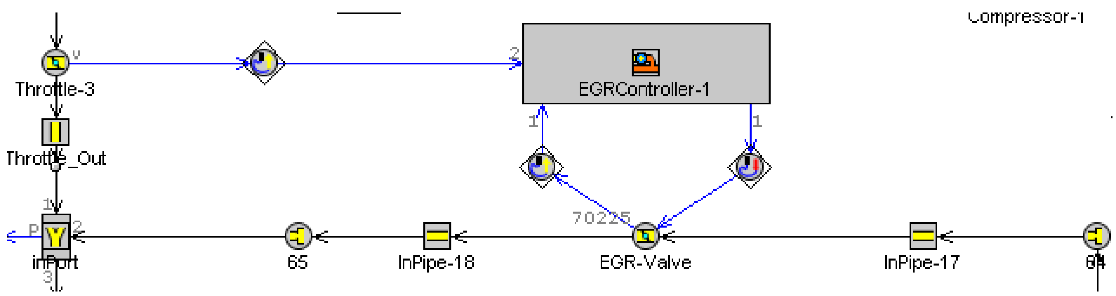

Figure 3.6 EGR Controller in GT-Power (see appendix 1 on detail on symbol)

It is important to adjust the parameter as EGR throttle discharge coefficient to maintain the exhaust gases percentage in a right range of values. The total target exhaust gas recirculation fraction could be ignored when multiple EGR paths present. The flow connection part could be defined as valve stored in template.

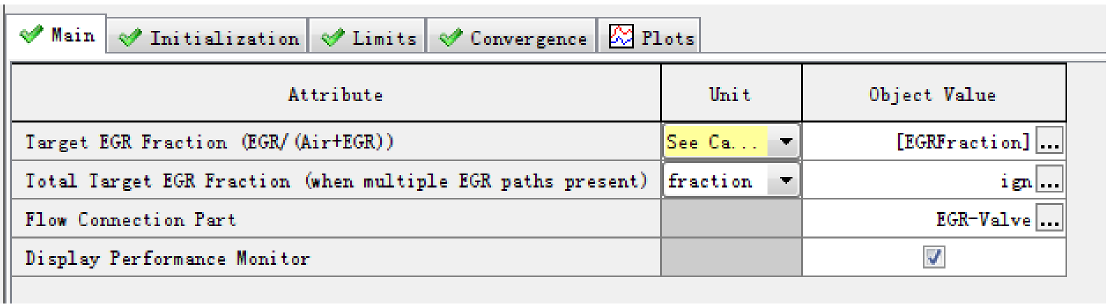

Figure 3.7 Setting of EGR Controller

3.5.3 Intake, exhaust system and Intercooler.

The intake system is composed of an air filter, a throttle and a throttle with individual fuel injectors. There would be pressure losses since the mixture crosses over single of those components, which relies on engine speed, the cross-sectional area, the flow resistance or components material and the charge density. In the orifice conn named bellmouth, which connects the endenvironment part, the discharge coefficients as forward with reverse direction should be considered. This orifice is design to guarantee the transition from environment to pipe without losses in the first subsystem. Some piperound components are introduced to represent path and air filter of intake system, as well as an orifice for throttle restriction. As for the modeling of intake manifold, a series general pipes and flowsplits should be considered.

The exhaust system typically consists of an exhaust manifold, exhaust pipe and a catalytic converter for controlling the emission with a muffler or a silencer.

The intercooler is used to cool the air that comes from the compressor. When using a turbocharger, the air density increases and hence the inlet charge temperature increase in the same time. By using an air-air cross flow heat exchanger, the pressure and temperature drop could be achieved to eliminates the danger of knock, preserving the benefit of more air-fuel mixture burn per engine cycle, increasing the output of the engine.

The models of these systems or component are shown as followed:

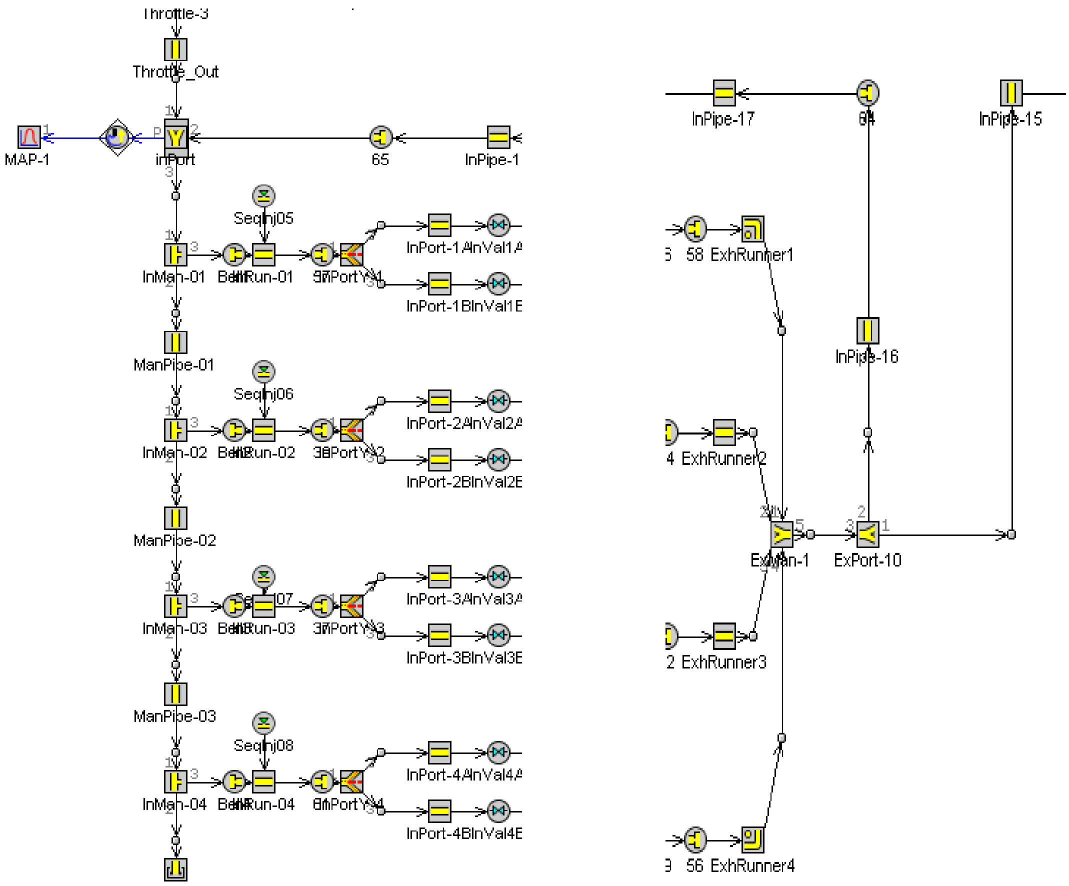

Figure 3.8 Intake and Exhaust System Model in GT-Power (see appendix 1 for explanations on symbol)

3.5.4 Overall engine model

Inside the modeling process of engine, the engcylinder object is special since main inputs are defined as reference objects. The reference could indicate heat transfer, wall temperature, combustion, geometry and flow inside cylinder. Each cylinder should be connected to the engine cranktrain object with appropriate firing order.

The engine model made by GT-Power is shown as followed. It should be noticed that the aftertreatment device is not accomplished as detailed as possible since the objective of this project is not concerning about the engine emission. The dynamometer model is included in this engine model. The parameter or Simulink simulation plot could be set up during the modeling.

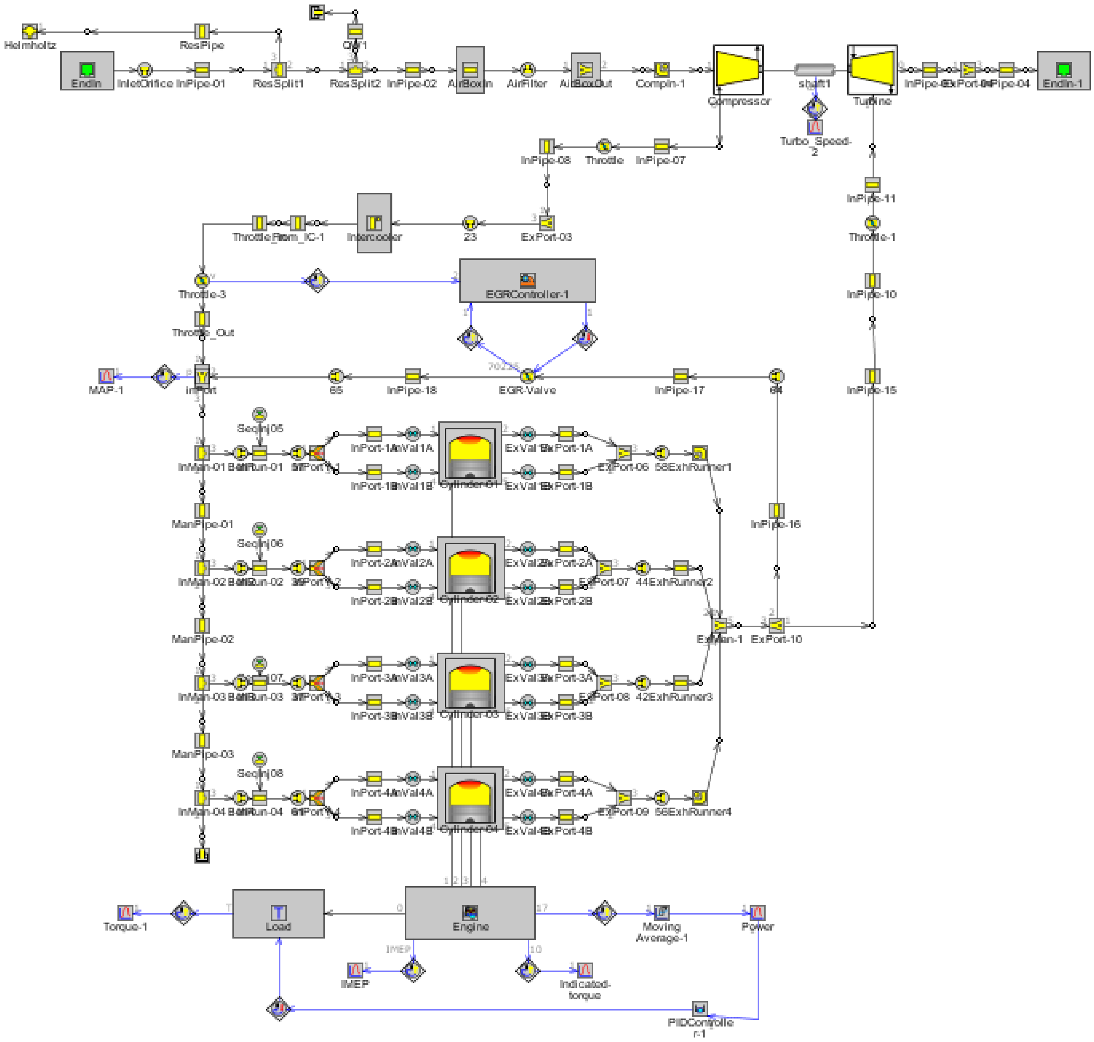

Figure 3.9 Overall Engine model without SimulinkHarness mode (see appendix 1 for explanations on symbol)

3.6 Conclusion

In this chapter, the engine model is accomplished in the GT-Power environment. The mean value method of modeling is adapted during the modeling process. By using GT-Power, the modeling procedure is simplified and the modeling diagrams are demonstrated more directly.

In the next chapter, the control strategy of engine control system would be simulated in Simulink. The engine model developed in this chapter would adjusted to couple with model of control system in the following chapters.

Chapter 4 Engine control strategy simulation in Simulink

4.1 Introduction

The operating action of driver, as well as road conditions, is changing continuously. These nonlinear phenomenon are the basic consideration of engine control system. The control of the nonlinear system on real time field is a sophisticated mission. In general, the solution of the controller design implies discovering the correct expression of the control operations in mathematical equations that satisfy a series of required performance standards. The developing procedure of the control system should develop high level system demands firstly, The demands are usually abstract and verbal, also barely indicate to a identifiable design problem. The control module, as the result of this procedure, will be arranged in bulk to the final product. The object of development in this control system is to offer a dependable, robust and renewable alignment of operations to develop engine control units.

Recently, with the development of computer aided design and analysis tools, the efficiency of design processes has been improved significantly. As discussed in previous chapter, the application of model-based controller design has increased. The engine-control system should comprise air fuel ratio control, idle speed control, anti-knock control, exhaust gas recirculation control, ignition control and transmission control. It can be ensured that engine could work around optimal states during all operation at the range of fuel economy, emission and driving comfort by engine control system.

Fuel injector is the main driving mechanism of air fuel ration control. The mass air flow rate could be obtained by throttle angle defined from driving action, and eventually this rate could determine the fuel flow as proportional.

The idle speed control is used to estimate and govern the speed of engine by regulating airflow rate thanks to valve in intake throttle, perceiving vehicle quality, ensuring low emission with better fuel economy. The crankshaft angular position and engine speed are needed for this control.

In this chapter, air-fuel ratio control strategy of the engine and the control strategy of single turbocharger with bypass control would be discussed. The engine conditions concerned would include three different working conditions: Stable condition, transient condition and idle speed condition. Furthermore, the structure of these models and the general simulating processes is described. If the result show that the controller can choose the relevant controller for different operating condition automatically and make the air-fuel ratio reach the expect value, it could prove the correctness of the control strategy.

4.2 The modeling of air-fuel ratio control module

The air fuel ratio control, also recognized by lambda control, needs the information provided by the Exhaust gas oxygen (EGO) sensor for the feedback control. The behavior of this sensor is extremely nonlinear. This sensor could produce a voltage, which is proportional to the oxygen amount remaining in exhaust gas. The sensor could point out the intake air fuel mixed gas is rich or lean.

In the model developed in this chapter, the three different operating conditions control strategy are achieved: stable operating, transient condition (concerning acceleration and deceleration) and idle speed control. By using the switch mode, a total air-fuel ratio controlling mode is accomplished. This model could determine the different working conditions and automatically choose the corresponding control mode for each working condition. Theoretically speaking, when the throttle angle equals to zero, the idle speed mode should be chosen, however, in real condition, the throttle angle is not completely closed during the idle speed mode, so the value of throttle angle as 2.6 degree is defined. When the throttle angle variation rate of change is greater than 3 degree, the controller transfers into transient control mode. The structure of overall controller mode is shown as followed:

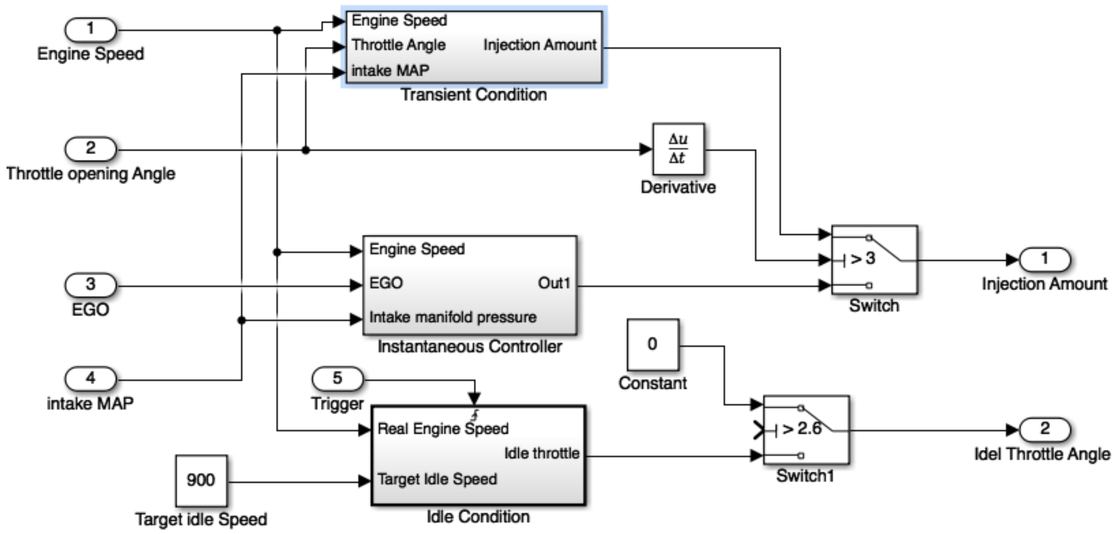

Figure 4.1 Overall Controller Model in Simulink

4.2.1 Stable operating controller

The stable operating controller mainly based on the open loop control mode and close loop fixed mode. The open loop control adjusts the fuel injection amount by the velocity-density method of the mean value model. The intake air flow rate is calculated by the mean value model. Hence the fuel injection amount could be determined by the stoichiometric air-fuel ratio.

The core control equation of this mode is to calculate the intake air-flow rate, the equation should be:

$$\dot{m_{a0}} = \frac{V_d}{120RT_m}\eta_{vol}NP_m = C_{(N,P_m)}NP_m$$

$$\dot{m_f} = \dot{m_{a0}}/(A/F)$$

In the equation, $\dot{m_{a0}}$ is the intake air flow rate with unit as kilogram per second, N is engine speed with unit as revolutions per minute, P_m is the manifold air pressure with unit as bar; V_d is volume of engine cylinders with unit as cubic metres; η_{vol} is volumetric efficiency, T_m is intake air temperature with unit as kelvin; $C_{(N,P_m)}$ is the coefficient of pumping air.

Actually the coefficient $C_{(N,P_m)}$ is a function of engine speed and intake manifold air pressure. The coefficient should be obtained by the calibration test of engine, storing in the ROM of the controller by the form of table. During the real operating condition, the coefficient $C_{(N,P_m)}$ should be obtained by look-up table method.

In the model developed in this project, the coefficient $C_{(N,P_m)}$ could be obtained by the calibration test of engine modeled by GT-Power. During the calibration test, the typical operating conditions should be defined, then determined the corresponding intake manifold air pressure P_m and intake air flow rate $\dot{m_{a0}}$. Eventually the coefficient $C_{(N,P_m)}$ could be calculated by the equation and the table of coefficient should be listed. This method is completely practical, however, in this project, to simplify the model, the empirical formula is used to replace the complicated calibration method [21]:

$$\dot{m_{a0}} = -0.366 + 0.08979NP_m - 0.0337N{P_m}^2 + 0.0001N^2P_m$$

The Exhaust gas oxygen sensor, sometime recognized like lambda sensor, estimates the proportion of oxygen amount of exhaust gas to dynamically adjust the air-fuel ratio. The signal of exhaust gas oxygen sensor is switch type: when the sensor detects the air-fuel mixture is rich (greater than stoichiometric air-fuel ratio), the output signal is high voltage; while the air-fuel mixture is lean (less than stoichiometric air-fuel ratio), and the output signal is low voltage. A hyperbolic tangent function could be used to present that function:

$$EGO = (1 - \tan\left(20 * \left(\left(\frac{A}{F}\right) - 14.7\right)\right))/2$$

The closed loop correct mode is to adjust the injection fuel amount based on the feedback signal generated by exhaust gas oxygen sensor.

The Proportional-integral control (PI control) is utilized to control the EGO sensor signal. The expression of PI control is:

$$e_0 = \begin{cases} 0.5 & EGO \leq 0.5 \\ -0.5 & EGO > 0.5 \end{cases}$$

$$C_{mf} = Pe_0 + Ie_0 \int dt$$

where C_{mf} is the correctness value of injection fuel amount.

The structure of stable operating controller is shown as followed:

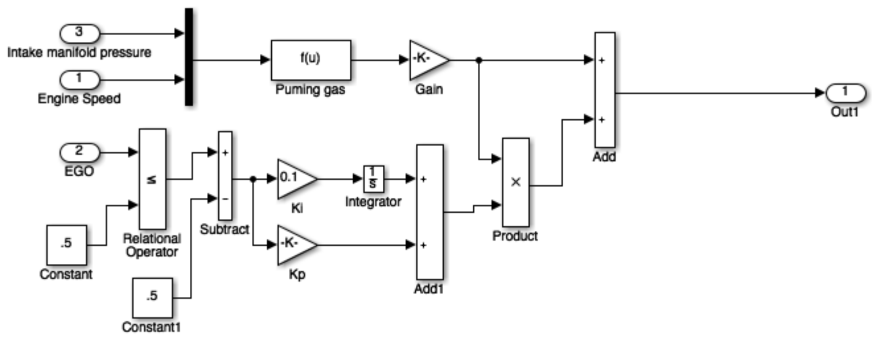

Figure 4.2 Stable Operating Controller in Simulink

4.2.2 Transient operating condition controller

The fundamental aspect of transient condition lies in its operating discrepancies compared with steady state operation. During the transient operation, both the engine speed and the amount of injected fuel change continuously, consequently, the air-supply and the boost pressure to the engine cylinders are influenced [16].

Under the transient operating condition, due to the gas filling effect, the MAP (manifold air pressure) sensor can not measure the intake manifold air pressure with a high accurate. Additionally, the fuel injected by the injector is not the same as the fuel induced into the cylinder for the compression and expansion stroke, since the intake pipe dynamic oil-film effect and wall wetting phenomena. To eliminate the air-fuel ratio deviation caused by the factors described above, two correction modules are introduced into the transient operating condition controller model: Observer of intake pressure and correction of dynamic oil-film.

The observer of intake pressure generates an estimated value of intake pressure under transient working conditions by calculating the equation based on the mean value model. During the calculation of cycle intake air flow rate, the actual measured value is replaced by this estimated value. The calculation model of this observer would be represented by the equation as:

$$\dot{m_{at}} = f(\theta)g(P_m)$$

where $\dot{m_{at}}$ is the air flow rate at throttle, $f(\theta)$ is a function of throttle angle with unit as degree, the equation is[23]:

$$f(\theta) = 2.821 - 0.052312\theta + 0.10299\theta^2 - 0.00063\theta^3$$

$g(P_m)$ is the function of intake air pressure as estimated value.

$$g(P_m) = \begin{cases} 2\sqrt{P_m P_a - {P_m}^2}\,\mathrm{sign}(P_a - P_m)\,/P_a \\ \mathrm{sign}\,(P_a - P_m) \end{cases}$$

where sign() is the signum function, P_a denotes the ambient air pressure.

The intake manifold pressure could be calculated as

$$\dot{P_m} = \frac{RT_m}{\dot{V_m}}(\dot{m_{at}} - \dot{m_{a0}})$$

And the fuel injection amount could be calculated in the same way as described in the stable operating condition by stoichiometric air fuel ratio.

The correction of dynamic oil-film mode is structured based on the fuel evaporation and oil-film model of mean value model. The equation to describe the mode would be[23]:

$$\frac{d\dot{m_{ffv}}}{dt} = 1/T_f(-\dot{m_{ffv}} + X\dot{m_{finj}})$$

Where $\dot{m_{finj}}$ is the fuel injection mass flow rate; $\dot{m_{ffv}}$ is the oil-film evaporated mass flow rate; T_f is the time constant as oil-film evaporation (equals to 0.25), the fuel directly formed vapor after injection vaporization could be determined by the coefficient X:

$$\dot{m_{fv}} = (1 - X)\dot{m_{finj}}$$

$$X = a_0 + a_1\theta$$

The coefficient X describes the ratio of fuel deposed on the intake pipe. The two coefficients a_0 and a_1 are valued as 0.01 and 0.00889 respectively.

The effective fuel mass flow injected into cylinder could be determined as:

$$\dot{m_{cyl}} = \dot{m_{fv}} + \dot{m_{ffv}}$$

A recompense coefficient $C_{mf}{}' = \dot{m_{finj}}/\dot{m_{cyl}}$ could be calculated to revise the injection fuel amount of open loop control value.

The overall transient condition controller model is shown as followed:

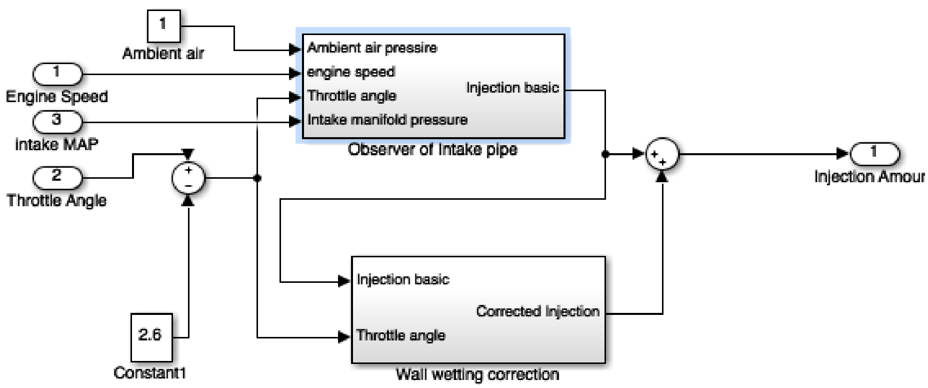

Figure 4.3 Transient Condition Controller Model in Simulink

4.2.3 Idle speed control condition

As described in chapter 2, the idle speed control is used to estimate and govern the speed of engine by regulating airflow rate thanks to valve in intake throttle, perceiving vehicle quality, ensuring low emission with better fuel economy. By taking various load torque demands into account, the controller provides the throttle angle to controlling system referred to the set value of the idle speed [4].

For the engine idle speed control, fuzzy logic control – a mathematical system that analyzes the analog input values based on the logical variables, which present a continuous value between 0 and 1, contrary to the classical or digital logic which operates as true or false – is widely proposed to be used. However, due to the complicated algorithm and difficulty in understanding, PID control is more classical to be used in idle speed control field, as well as for didactic reasons.

PI control model is used to design the idle speed controller. The controller model could be represented as [24]:

$$\beta(t) = K_p\big(N_{set} - N(t)\big) + K_i \int (N_{set} - N(t))\, dt$$

where the N_{set} is the target idle speed set-point, K_i and K_p are the integral and proportional coefficient respectively.

The PI controller model is shown as followed:

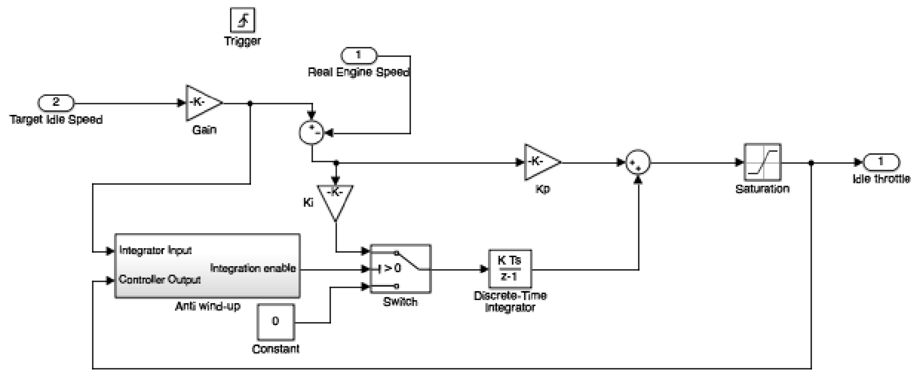

Figure 4.4 Idle Speed Condition Controller in Simulink

The type of integral part is numerical. Considering the actual operating of this controller is synchronized with crankshaft, a trigger signal is needed to simulate the synchronized rotation.

In addition, in actual structure of PI control system, it is necessary to make suppression of the system to make the effect of anti wind-up.

4.3 Control of turbocharger

The turbocharger group is made up of a turbo compressor and a turbine installed on the same shaft. The turbocharger is used to increase the pressure of the intake air going to the engine using part of the enthalpy of the exhaust gas and converts the thermodynamic energy into mechanical energy to move the compressor.

The compressed air coming out from the compressor enters the intercooler to be cooled and to increase its density before reaching the intake manifold and entering the cylinders.

The target of utilize the turbocharger is to allow the engine generates high torques at low engine speeds. In this respect, the turbine housing is designed for the working condition at low speed with low exhaust gas mass flow rate. Therefore, in order to prevent the turbocharger from overloading during the high engine speed condition with higher exhaust gas mass flow rate, some control method governing the utilization should be used. Most used turbocharger control methods are waste gate controlling and variable turbine geometry controlling.

The most accepted way of limit boost pressure is wastegate method, which is using a valve that in the case of opened valve, the exhaust gas could bypass the turbine. A feedback path to exhaust system downwards of turbine appears.

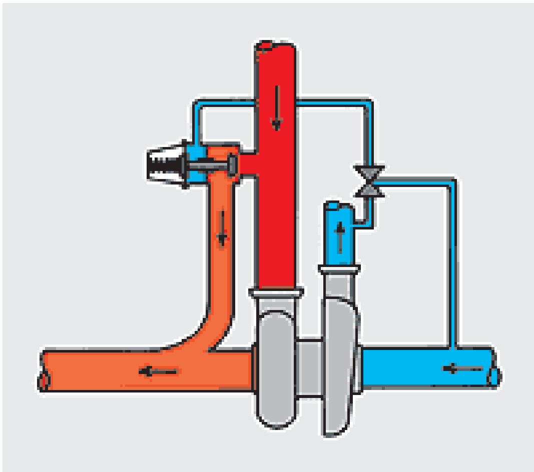

Figure 4.5 Example of Turbocharger controller

The wastegate is pressure controlled by proportional-integral control pressure. A proportional valve produce the pressure, which is smaller than the boost pressure. This proportional valve ensures that the diaphragm is controlled by the boost pressure and inlet pressure of compressor in changing proportions. Electronic system of the engine participates in the controlling of this pressure valve.

The intake manifold air pressure sensor generates a pressure signal, which is applied to the waste-gate diaphragm. The force generated by the pressure valve suppress the spring thus opening the bypass valve. The bypass valve routes exhaust around the turbine and dissipates pulse energy directly to the environment through exhaust pipe. The pre-loaded spring determines the pressure at which the wastegate actuator opens, making the maximum boost pressure remain constant. However, with the usage of electro-valve, it is possible to set the maximum boost-pressure based on the engine working conditions. Engine control uses the information of air quantity (estimated by speed density method as described in previous pages), of engine speed and throttle position to define a target boost pressure map. A closed-loop algorithm is used to minimize the difference between actuated and target pressure.

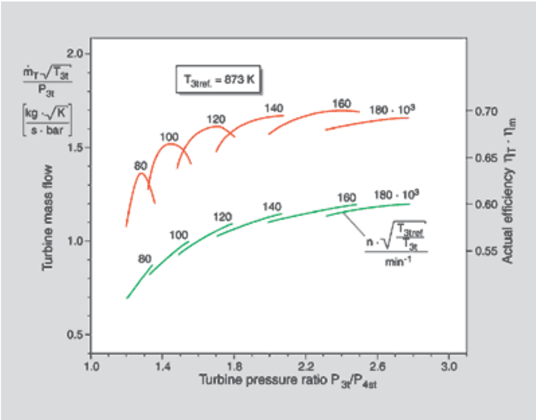

Figure 4.6 Turbine Map

Another way for turbocharger controlling is to use variable turbine geometry. In this kind of method, the cross section area of turbine flow could be changeable according to the engine working condition. This kind of method makes the energy stored in exhaust gas to be employed in maximum extend under all operating conditions by modified the turbine's flow resistance continuously, increasing the efficiency greatly. An adjusting ring is rotated to provide simple adjustment of the blade angle.

The design of a boost controller for the turbo engine system is difficult due to the nonlinearity of the system (governed by partial differential equations and geometry complexity). There would be two methods of boost control design proposed. One is classical Proportional-Integral-Derivative control with no process model required and another one is linear quadratic compensator, which is a state space controller requiring a process model [18].

In this paper, the PID controller is utilized. This 3 terms controller use an error signal to 3 terms, attaining a control signal. The first term is proportional to the error performing as a simple gain, while the second term integrates the error successively multiplying the signal by a gain and the third term differentiates the error multiplying the signal by a gain.

The PID control can be tuned without a specified process model using Ziegler-Nichols tuning method. The Ziegler-Nichols method demonstrates that for the step function response, the K_I and K_d gains are set to zero initially while K_p incrementally increases until it reaches K_u, the gain value at which the output of the loop starts to oscillate. The model yields the gain value and the period T_u are equal to 2 and 1.2 respectively. The PID control gain are set by Ziegler-Nichols PID tuning method as shown in table followed [18]:

	K_p	K_I	K_d
PID control gain	$K_u/1.7$	$T_u/2$	$T_u/8$

The structure of PID control simulated in Simulink are shown:

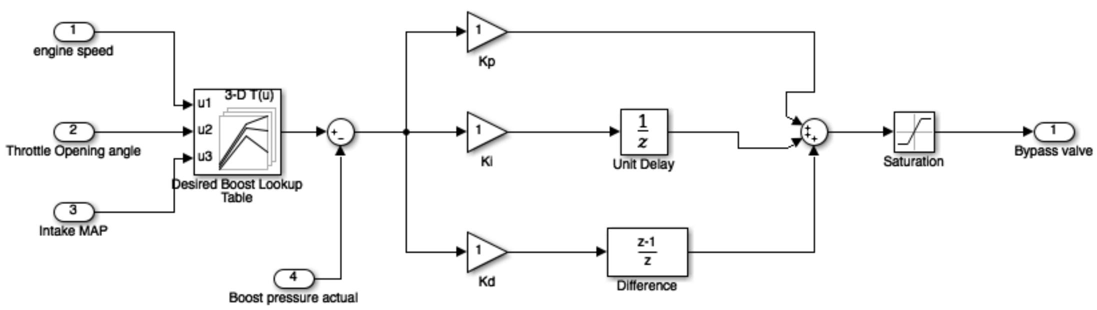

Figure 4.7 PID controller of Boost Control

Therefore the total control model simulated in Simulink is accomplished. The overall control model is shown:

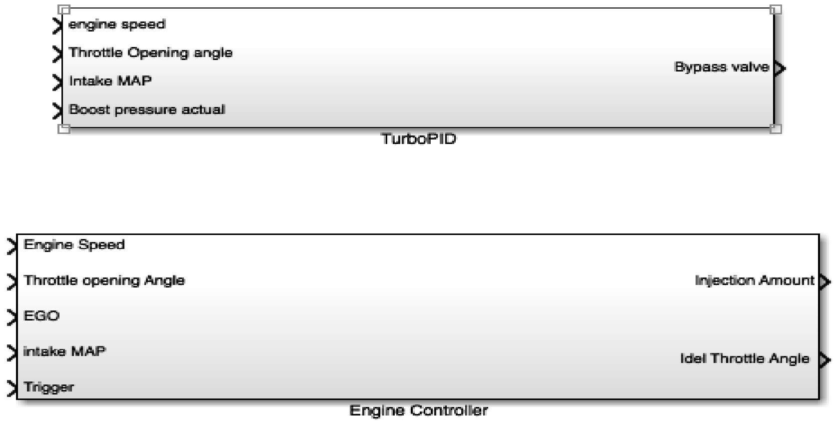

Figure 4.8 Overall Structure of Control System in Simulink

4.4 Conclusion

In this chapter, the engine control system and turbocharger controller are modeled in Simulink environment. The air fuel ratio control strategy is utilized for engine control. Three different operating conditions of engine, such as idle speed condition; stable condition and transient condition are accomplished. The turbocharger controller is modeled based on the PID control theory.

In the next chapter, the Simulink model and engine model developed in previous chapter would be coupled inside Simulink environment to verify the function of engine control system model in this chapter.

Chapter 5 Implementation of Engine model in Simulink environment

5.1 Introduction

The coupling of GT-Power and Simulink is based on the control module in the GT-Power software. To achieve the coupling of these two models, the control module in GT-Power including SimulinkHarness (The mode used for outside environment signal connecting), sensorCon (The mode used as a sensor and generates signal), actuatorCon (The mode used as a actuator to make the engine control strategy change the engine), and monitorSignal (a customized outputmode) is used. The schematic of the coupling of GT-Power and Simulink simulation is shown as followed:

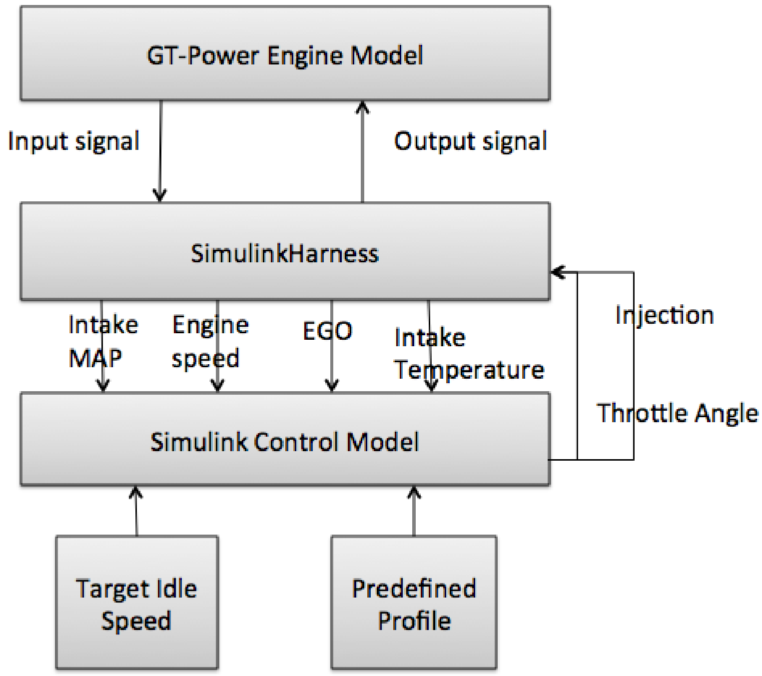

Figure 5.1 Schematic of Coupling

The sensor in the GT-Power model gathers the engine speed, intake manifold air pressure, exhaust gas oxygen signal, intake temperature of the gasoline engine and generate them as input signal. Then the signal is transmitted into Simulink model via SimulinkHarness mode, while the target idle speed and predefined profile for the throttle angle are imported into Simulink control model directly. Some other performance indicated characteristic generated by engine model indicated can be directly shown by the scope function in Simulink. In the Simulink model, the engine speed gathered by the sensor and the speed desired by the input profile defined makes difference. The difference is utilized by the each control subsystems for the three different working conditions, to calculate the cycle injection amount accomplishing the air-fuel ratio control and idle control of the engine under different operating conditions. Also the throttle angle is calculated by the Simulink control model. The throttle angle and injection amount are used as output signal, transmitted into simulinkHarness model in the GT-Power model and achieving the control of throttle valve, bypass valve of exhaust system and injection system to achieve the air-fuel ratio control, idle speed control and turbocharger control.

5.2 Set up of GT-Power Model

Based on the engine model already developed in the previous chapter, set up the engine model for the coupling is easy to be achieved. The sensor and the actuator as well as the SimulinkHarness part are the components needed to be drag into the file from the library. Several sensors are used to measure the engine performance indicators and generate the signal which should be transmitted to the Simulink model via SimulinkHarness. The sensors utilized includes sensor for the engine speed with dimension as rpm, the sensor for the intake manifold pressure with dimension as bar, the sensor for the exhaust gas oxygen which output should be a Pulse width module signal as high or low, the sensor measuring the engine torque, actual boost pressure used for the turbocharger waste gate control and the sensor measuring the air-fuel ratio to demonstrate the correctness of the air-fuel ratio control strategy developed in Simulink. Each sensor should be connect to the simulinkharness or a plot mode as signal with a number to indicate the order of each signal. The part of sensor group and the simulinkharness mode used in GT-Power are shown as followed:

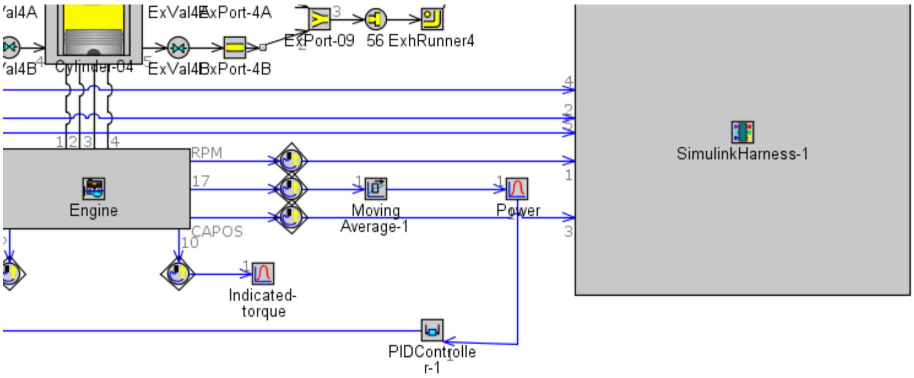

Figure 5.2 SimulinkHarness Module

The actuators used in this model are actuator for the injector controlling the air-fuel ratio, the actuators for the throttle of intake system and the throttle of turbocharging control. The actuators should connect to the each throttle or injector respectively. During the connecting action, proper option should be selected such as orifice diameter for throttle and injection amount of injector. The time control flag in run setup should be set as periodic (sec) and maximum simulation duration should be set as 1 sec, while setting the automatic shut-off when steady state flag to off to guarantee the simulation will continue until the end of simulation duration. Save the model as .dat file from run menu. The final engine model with simulinkharness is shown as followed:

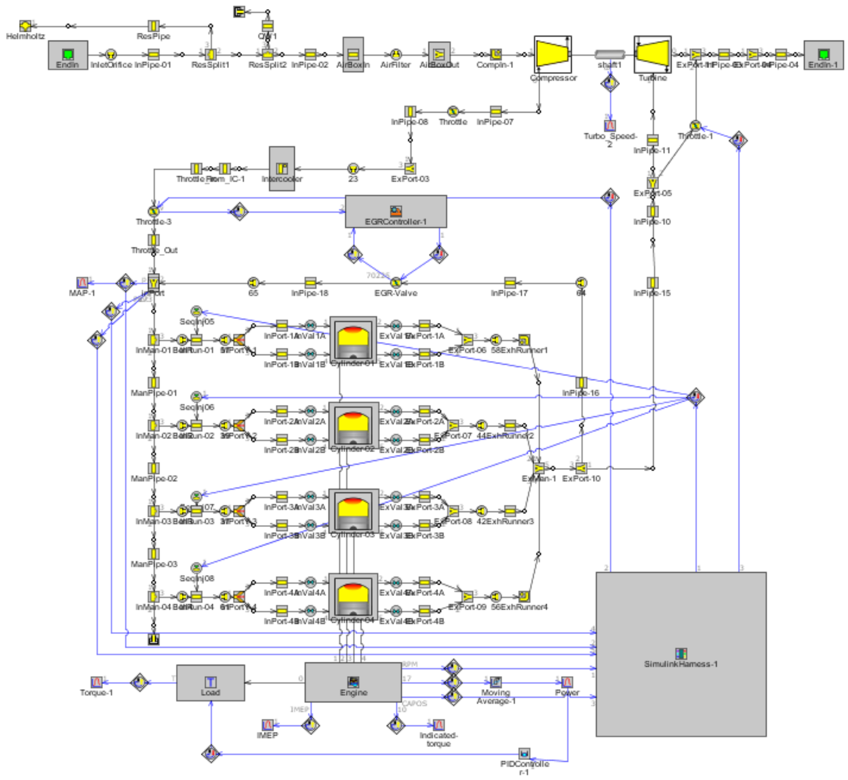

Figure 5.3 Engine Model used for Coupling

5.3 Set up of Simulink Model

To coupling the Simulink model with GT-power engine model, the engine model should be imported as a single block in the Simulink library, since the Simulink is the main environment of the simulation coupling. To have a branch of GT-Power model in Simulink library browser, the pathtool should be used in matlab windows, create the directory which contains the S-function library.

After the branch appearing in the library browser, drag the engine model block with icon DP denoting double precision solver. The block with icon sp denoting single precision link remains gray since it is only retained for legacy reasons.

Besides that, to simulate the predefined profile of desired throttle position and the load, the ramp and step signals are used. The detailed diagram of these signals are shown in the next chapter with the final result.

Then the overall engine control model should be demonstrated as:

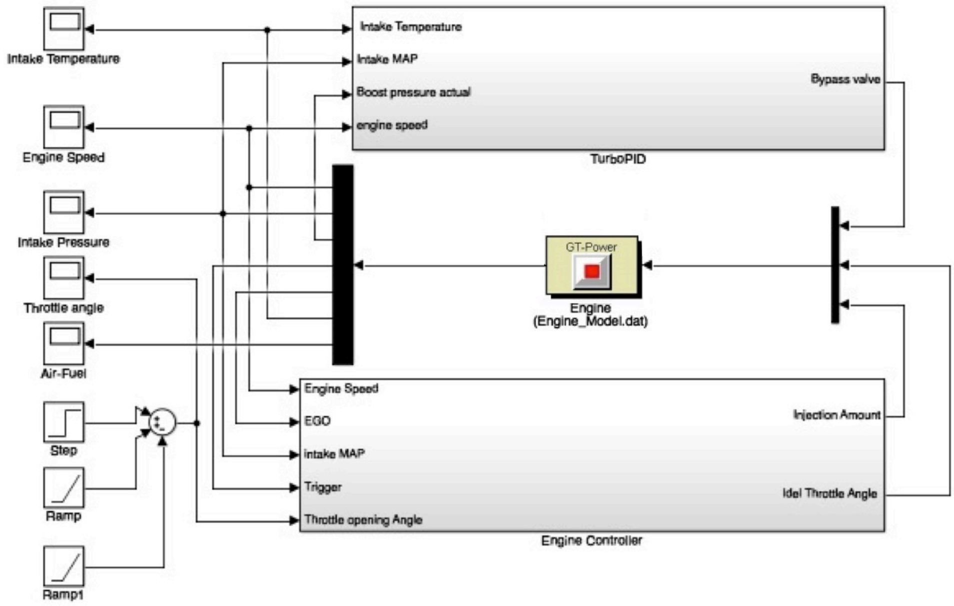

Figure 5.4 Schematic of engine control simulation Coupling

5.4 Conclusion

In this chapter, the engine model developed in previous chapter is implemented into Simulink environment with control system simulation. Different input and output are defined. The input of engine control system should be engine speed, Exhaust gas oxygen, intake manifold air pressure, throttle opening angle and intake temperature. The output of control system should be injection amount and idle throttle angle.

In the next chapter, the simulation would set up and run. The results of simulation developed in this chapter would be demonstrated and compared in the following chapter.

Chapter 6 Simulation Results

6.1 Simulation Result

The coupling of GT-Power and Simulink used in this thesis only supports one case of running. Although all the cases are set up in the case setup table (which can have multiple cases) of GT-Power model, only one single case will be run.

After clicking the start simulation button in Simulink, the results could be observed. The results are shown in the following paragraphs:

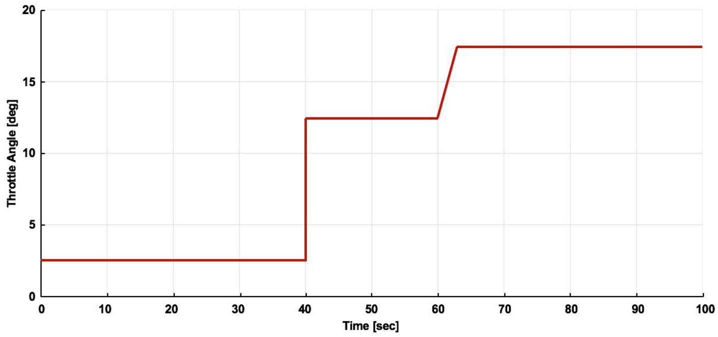

Figure 6.1 Throttle Angle

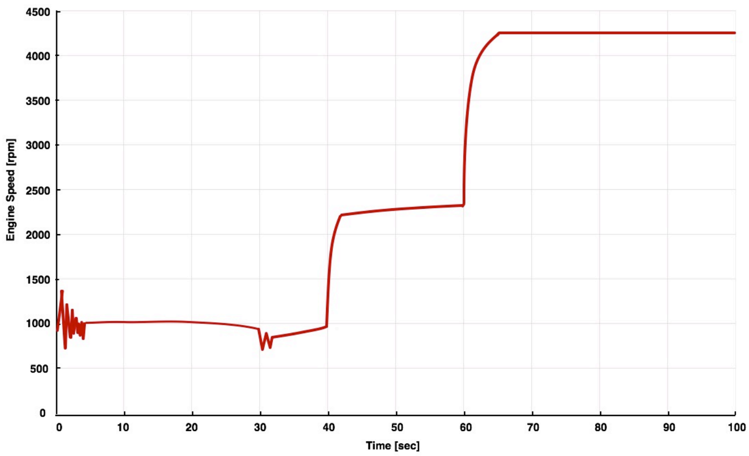

Figure 6.2 Engine Speed

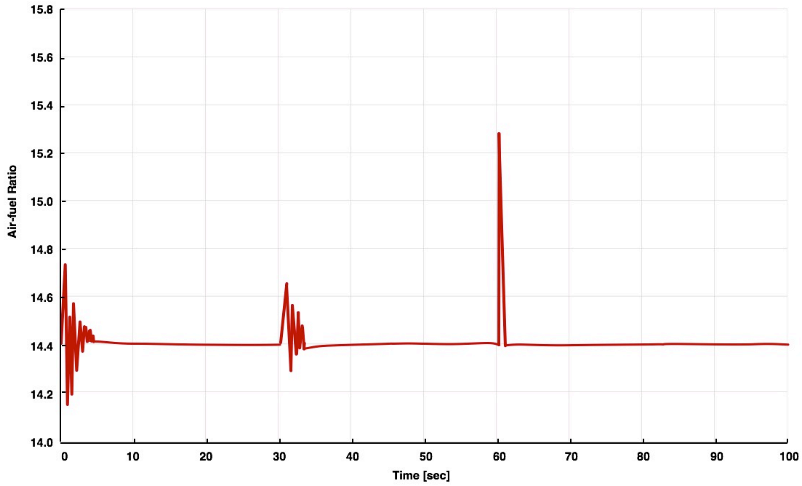

Figure 6.3 Air-fuel Ratio

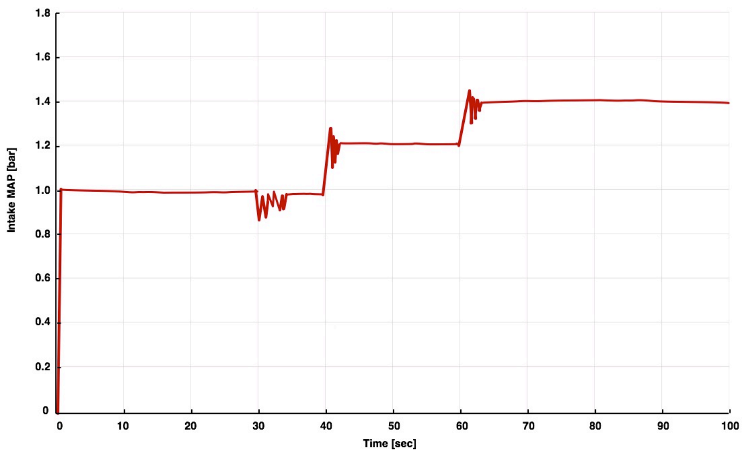

Figure 6.4 Intake MAP

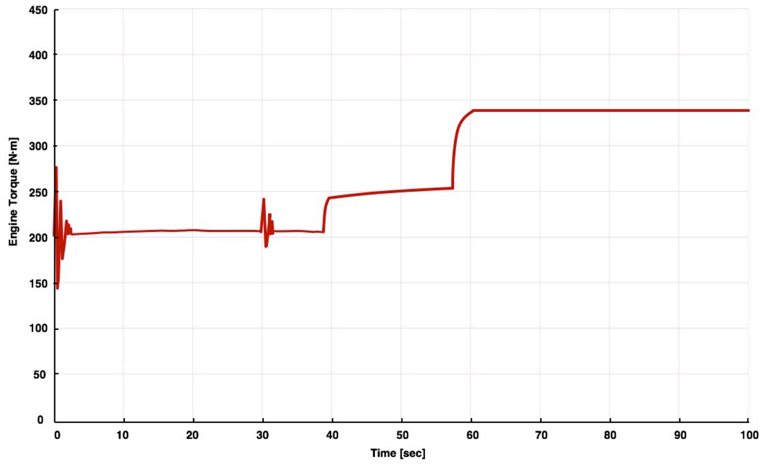

Figure 6.5 Engine Torque

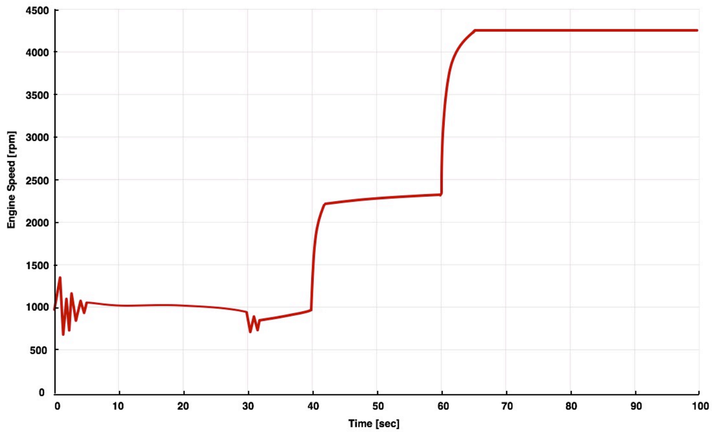

Figure 6.6 Turbine Speed

6.2 Analysis of simulation results

From the diagram it could be shown that:

1) During the stable operating condition, the engine speed remains stable and the air-fuel ratio accords to the theoretical value.
2) During the two transient operating conditions, the engine speed varies swiftly and smoothly, the variety of air-fuel ratio remains in a acceptable range.
3) In the first transient condition, due to the sudden change of throttle angle, the transient controller does not have sufficient time to response to that change,

causing the overshoot of the air-fuel ratio value. However in the second transient condition, the transient controller plays an important role in compensating the air-fuel ratio control with small overshoot occurs.

4) During the idle operating condition, even though the load changes suddenly, there is not large fluctuation of engine speed and air-fuel ratio occurs. After less than 5 seconds, the engine returns to stable working in idle speed operating condition. There is overshoot phenomena arising in the engine starting period.
5) During the low engine speed period, the engine outputs a high torque due to the existence of turbocharger, during the transient conditions, the turbocharger keep the boost stable. The response time is relatively low.
6) In the high engine speed range, the controller keeps the boost level stable by controlling the bypass valve.

Chapter 7 Comparison with On Board Diagnostic Results

7.1 Introduction of On Board Diagnostic

In the last chapter, the simulation results are shown. To verify the simulation results, some experimental tests could be introduced. On board diagnostic technology is used to accomplish this comparison. The vehicle on board diagnosis system mainly monitors the performance of the components failure function related to emission. It can be regarded as a term of vehicle self diagnosis and capability reporting. The on board diagnostic systems provide possibility to vehicle owner or repair technician in order to approach conditions of various subsystems of vehicle. The on board diagnostic system must be able to identify possible fault areas through the fault code, which should be stored in memory area of computer. The developed instrument used in vehicle on board diagnostic system can communicate with the electronic system of the vehicle to collect all the available sensor data. The sensor data could be collected is engine speed, vehicle speed that is measured on wheel, engine load if dynamometer is exist or vehicle is operating on the road, lambda sensor voltage, catalyst temperature, intake airflow, pressure and temperature. These sensor data could be used to calculate the consumption and power as model input.

Figure 7.1 On Board Diagnostic

Inside a vehicle with on board diagnostic equipment, the air - fuel management system takes charge of estimating total amount of air introduced into engine, and then provides accurate fuel volume to each cylinder, in order to accomplish better performance, the best fuel efficiency and low tail pipe emissions. The air flow passing the engine can be measured by inserting the sensor of the intake pipe. It can also be calculated by pulse code modulation (PCM) accurately via measuring the engine speed, throttle position and intake manifold pressure.

All air desired to be introduced into cylinders needs to be calculated through system so that the pulse code modulation calculates the proper quantity of fuel to adding to the charge mixture; leading to correct operation of catalytic converter and complete combustion as possible. If unmeasured air import into charging system, it will not add enough fuel to cause knock and incomplete combustion. Assuming these circumstances, the fuel efficiency of the engine is low, and there is a risk of adding excessive pollution to environment.

The mass air flow sensor, which is as known as MAF sensor is adopted to estimate the air flow rate introduced into cylinders of spark ignition engine. Under any working conditions of engine, pulse code modulation utilizes air quantity information to determine and transfer the correct fuel volume to the cylinder. The sensor is position in the pipe used for air induction in front of the throttle body and sends out an electrical signal to the pulse code modulation, which is proportional to the air flow to the engine. The mass air flow sensor is main input to the pulse code modulation for air flow information, and the oxygen sensor offers closed loop feedback to correct the burning air / fuel mixture in real time.

No air entry into the intake system will be recorded by pulse code modulation after the mass air flow sensor, and there may be an inappropriate air - fuel mixture. This will lead to the possibility of excessive emission, low engine efficiency and poor performance.

In several injection system, the manifold absolute pressure sensor, which as known as MAP, is used to calculate the amount of air introduced into the cylinders. The manifold air pressure sensor produces an electric signal to the pulse code modulation expressing momentary information of manifold pressure. These data, as well as engine speed and air temperature, are adopted to estimate the air density and define the air mass flow rate of the engine, so as to identify the fuel metering needed for the best combustion as optimum.

A tool, which is designed to collect all engine parameters, connecting to on board diagnostic connector has been developed. The tool is on the basis of an automotive computer with a UMTS modem, a Wifi interface, a GPS receiver and interface with OBD and CAN. The modem transfer the data to a database deposited on server [24]. The parameters, collected, with high frequencies (2-5 Hz) are: vehicle speed, air/fuel ratio, the intake airflow, rpm, engine load, accelerator pedal position, lambda sensor voltage, catalyst temperature, Close/Open Loop information, absolute load (volumetric efficiency), intake air pressure, EGR and ignition advance [24].

Typically, a simple USB KKL Diagnostic interface without protocol logic is utilized for signal level adjustment. The analysis of vehicle black box data can be carried out periodically, reclaimed for obtaining evidence after events likes accident, traffic violation or mechanical failure, or transmitted to third party automatically. [24].

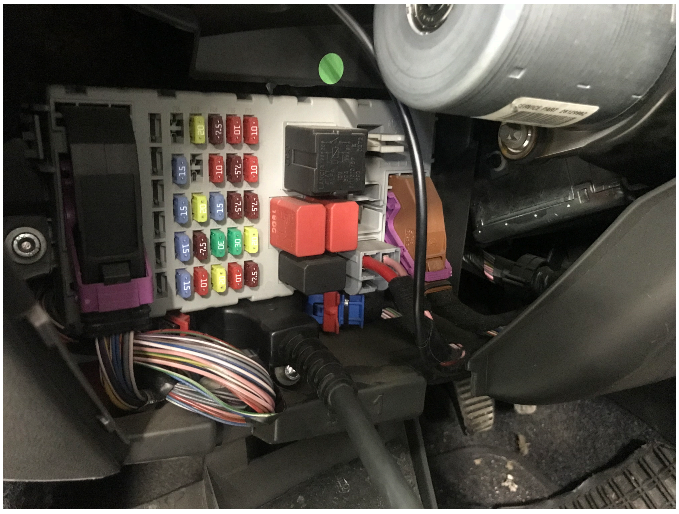

Figure 7.2 Connector Interface

7.2 On Board Diagnostic Results

To accomplish the exact testing condition as simulation test, the vehicle should be driven over the same input cycle test. However, since the testing condition is limited and chassis dynamometer is not presence, the input is set as throttle angle adjusted manually and result of engine torque could not presence. After connecting the OBD with the connector under dashboard, start the engine and the test could start by adjusting the throttle angle manually. The results are shown on the computer connecting to the OBD wirelessly by ESI[tronic] software. The test is repeated 8 times in order to gain the throttle angle value as desired.

The results with useful information are shown as followed:

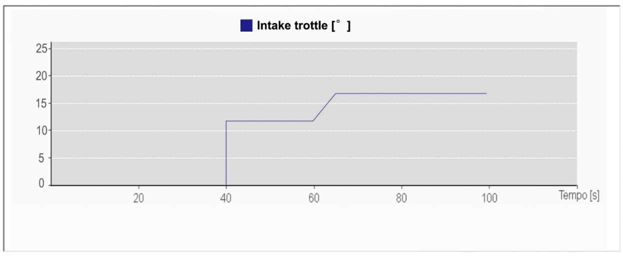

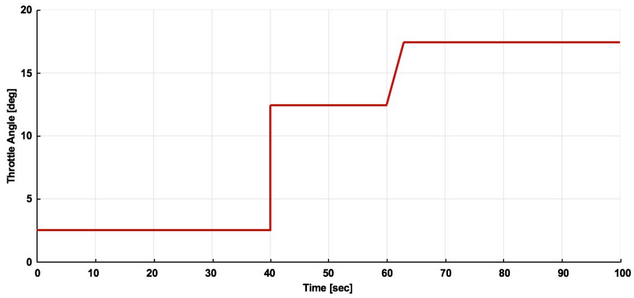

Figure 7.3 Intake throttle comparison from OBD and Simulation

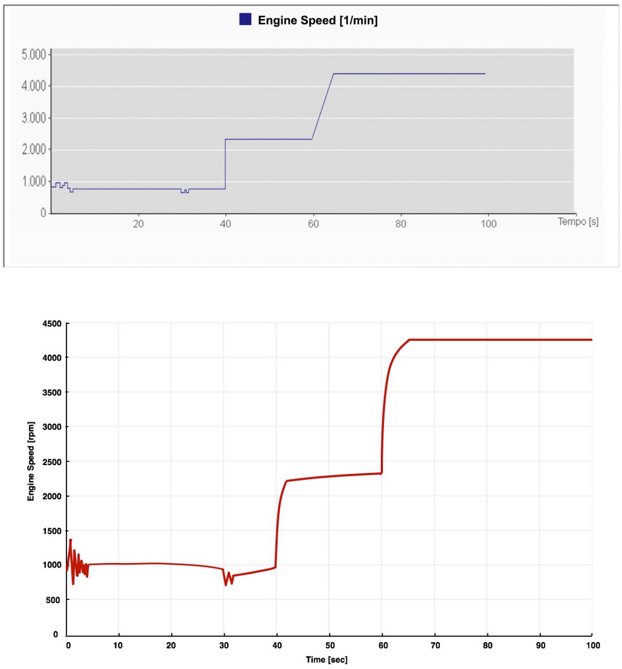

Figure 7.4 Engine Speed comparison from OBD and Simulation

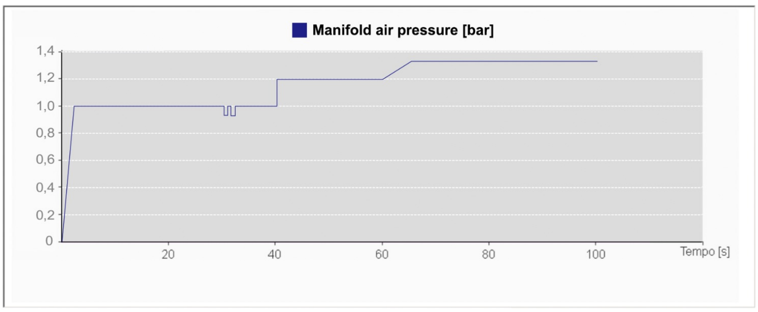

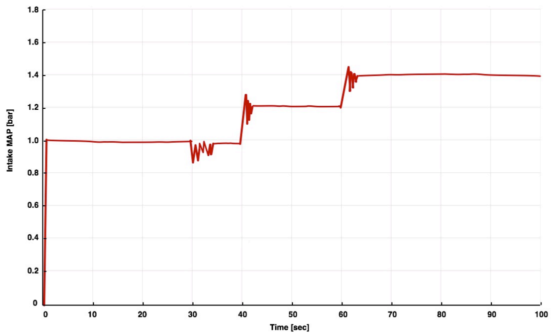

Figure 7.5 Manifold air pressure comparison from OBD and Simulation

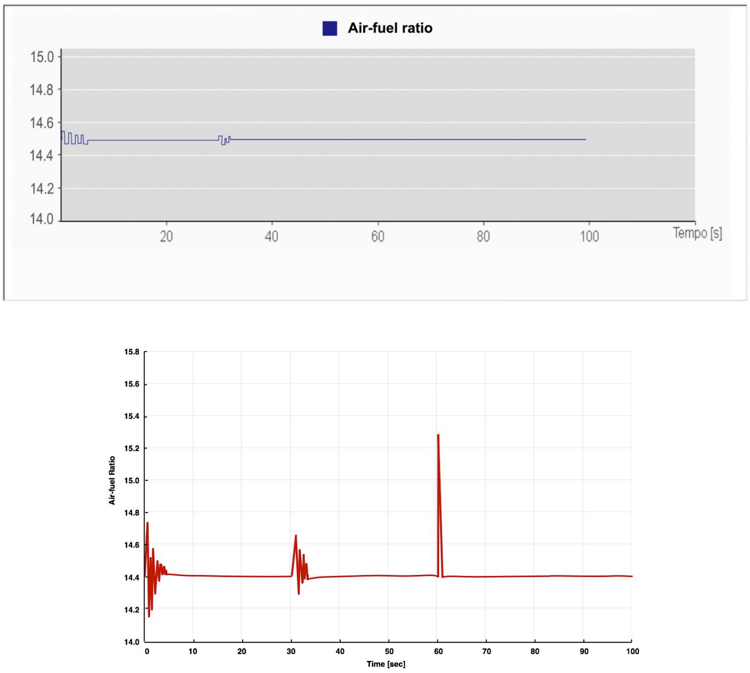

Figure 7.6 Air-fuel ratio comparison from OBD and Simulation

From the comparison between the results from OBD test and simulation test, the simulation results are in good agreement with experimental data. In the mean time, there are still some difference between this two kind of results. For throttle angle, it starts from 2.6 degree in simulation since in reality during the idle speed condition the throttle is not fully closed and the angle is assumed as 2.6 degree, however, in OBD test, the on board diagnostic software define the closed throttle angle as 0 degree. For the engine speed, the simulation results starts from 800 and during the transient since the transient controller does not have sufficient time to response, the overshoot is caused. In OBD test result, engine speed starts from 900 as predefined in the control unit and the overshoot results are compensated and filtered. For the air fuel ratio, the simulation results have large fluctuation around stoichiometric air fuel ratio during transient condition and initial, however in OBD test, the air fuel ratio keeps stable and little fluctuation occurs. The main difference is due to the engine control unit used in the on board diagnostic test is a commercial version with high maturity in control strategy and mapping of engine condition. In addition, the frequency of data acquisition is not high enough to show the sudden change of engine parameters.

7.3 Conclusion and future works

This thesis focuses on the development of engine model and the simulation of control functions, also focuses on the test the control functions with virtual engine model. In conclusion, by coupling the simulation of engine model developed in GT-Power and control model structured in Simulink, the different operating conditions controller of engine could be achieved, while the varying of the desired characteristics of engine performance could be observed. By the comparison with on board diagnostic test, it could be proven that this method could provide a stable solution aiming at using a accurate engine model to save development cost and time during early stage of examining the design of control system. This kind of method could provide a stable solution aiming at using a accurate engine model to save development cost and time during early stage of examining the design of control system.

For the next step of the final project should be developed, the auto generation of C or C++ programming code should be concerned. By using the function of auto-generation in Simulink software, the C or C++ programming code could be directly stored into the Arduino. After the code flashed into the microcontroller, the code should be test on the real engine. In the case of unexpected situation occurred according to the real tested results, the control strategy should be reviewed and checked.

Appendix

Engine Specification

Cylinder Layout	In-line 4
Combustion chamber	Pentroof type
Valvetrain	Single overhead camshaft
Displacement	1242cc
Bore	35mm
Number of cylinders	4
Stroke	40mm
Number of valves per cylinder	2
Torque	102 Nm/3000rpm
Fuel system	Multi-point injection
Compression ratio	9.5
Fuel Type	Gasoline
Minimum octane number	RON 95
Spark advance	Controlled by control unit
Spark advance defined in engine model	15^{o}
Maximum power	99 kw/5000rpm
Maximum torque	201(2500) Nm/2500rpm
Firing Order	1-3-4-2
Intake valve open	16^{o} BTDC
Intake valve close	53^{o} ABDC
Exhaust valve open	50^{o} BBDC
Exhaust valve close	16^{o} ATDC

On Board Diagnostic Test Results

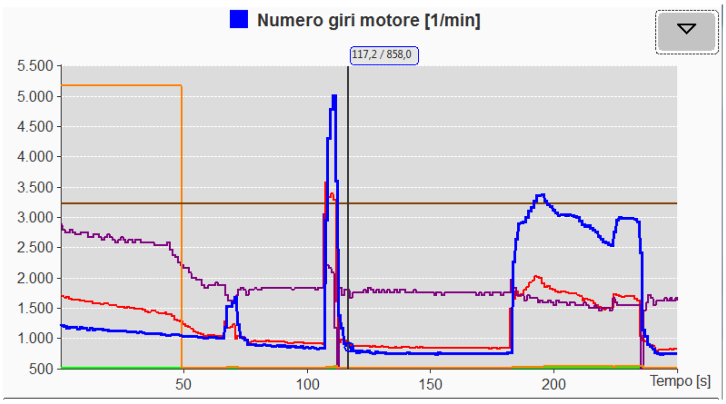

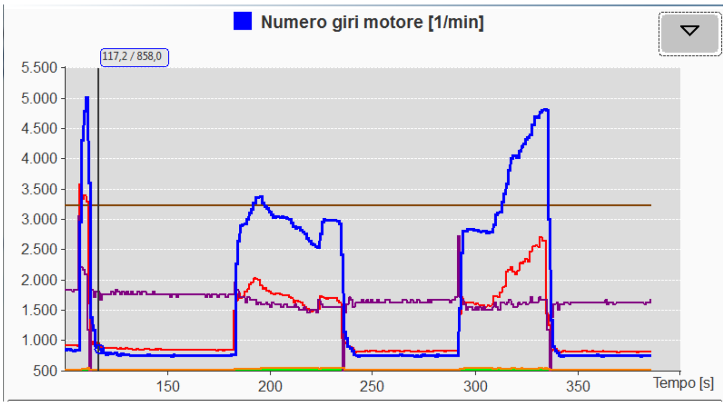

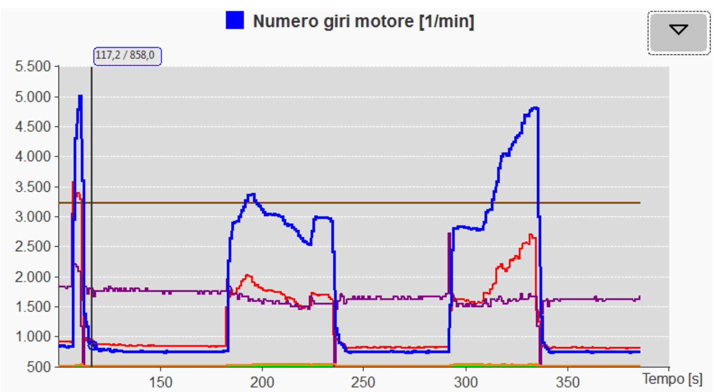

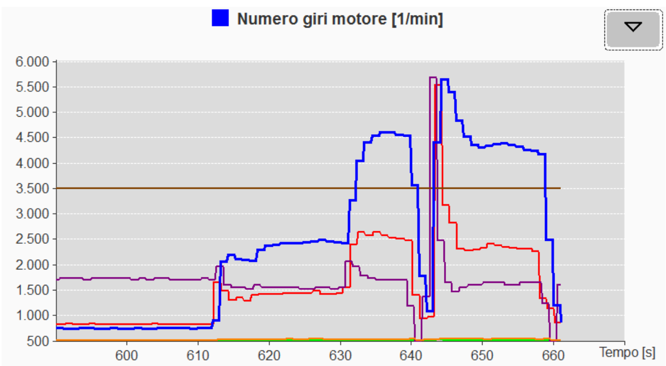

	FlowSplitSphere	Describe a spherical shaped flow split volume connected to one or more flow components
	EndEnvironment	Describe end environment boundary conditions of pressure, temperature and composition
	OrificeConn	Describe an orifice between two flow components
	PipeRound	Model pipes that have a round cross-section and an optional bend. Described data is used to automatically calculate the pressure loss coefficients that account for the associated head loss
	FlowSplitTRight	Describe a cylindrical shaped flowsplit volume connected to three flow components in a T-configuration
	EndFlowCap	Cap the end of a pipe or flowsplit opening in order to prevent any flow through it
	FlowSplitGeneral	Describe a flowsplit volume connected to one or more flow components. Can describe any shape of flowsplit
	Compressor	Represent a compressor in a turbocharged or supercharged engine. Predictions of mass flow rate, outlet temperature and consumed power are calculated by the use of a map
	ShaftTurbo	Describe the attributes of shaftturbo parts used ofr simulating the dynamic (speed, acceleration/deceleration) of turbocharger shafts
	Turbine	Represent a turbine of a turbocharger and/or a power turbine. Model a fixed geometry turbine, a turbine with a wastegate, or variable geometry turbine.
	ThrottleConn	Describe a throttle placed between two flow components
	InjAFSeqConn	Describe the operation of a sequential pulse fuel injector. Impose the fuel to air ratio and the resultant injection pulse width is calculated for each injection event
	FlowSplitY	Describe a cylindrical shaped flowsplit volume connected to three flow components in a Y configuration
	ValveCamConn	Define the characteristics of a cam driven valve including its geometry, life profile and flow characteristics
	EngCylinder	Specify the attributes of engine cylinders. The cylinder geometry is specified in the engine crank train

	SensorConn	Provide a control sensor link between a flow or mechanical part and control components part. Pass the signals from the flow or mechanical component to the control component
	ActuatorConn	A link between the controls library and multi-physics library (flow, mechanical, thermal, etc)
	SimulinkHarness	Couple GT-SUITE to third party software program Simulink. Regular control component
	MonitorSignal	Monitor instantaneous signals during a simulation
	PIDController	Contain a continuous proportional-integral-derivative controller. Achieve and maintain a target value of some sensible quantity from the system by controlling some input to the plant
	MovingAVerage	Compute averages over particular intervals of data as specified by the user.
	Torque	Describe the attributes of torque parts, which can be used to apply a torque to rotational mechanical parts.

Reference

[1] Thirouard, M., Mendez, S., Pacaud, P., Chmielarczyk, V., Ambrazas, D, Garsi, C., Lavoisier, F. and Barbeau, B. Potential to Improve Specific Power Using Very High Injection Pressure in HSDI Diesel Engines. SAE paper 2009- 01-1524, 2009.

[2] Matsura, Y., Nakazawa, N., Kobayashi, Y., Ogita, H. and Kawatani, T. Effects of Various Methods for Improving Vehicle Startability and Transient Response of Turbocharged Diesel Trucks. SAE paper 920044, 1992.

[3] Petitjean, D., Bernardini, L., Middlemass, C. and Shahed, S.M. Advanced Gasoline Engine Turbocharging Technology for Fuel Economy Improvements. SAE paper 2004-01-0988, 2004.

[4] Watson, N. and Janota, M.S. Turbocharging the Internal Combustion Engine, 1982 (Macmillan Publishers Ltd, Basingstoke).

[5] Watson, N. and Janota, M.S. Turbocharging the Internal Combustion Engine, 1982 (Macmillan Publishers Ltd, Basingstoke).

[6] Stobart, R.K., Challen, B.J., & Bowyer, R. (2001). Electronic controls-breeding new en- gines. SAE technical paper. No: 2001-01-0255.

[7] Chamaillard, Y., Higelin, A., & Charlet, P. (2004). A simple method for robust control design, application on a non-linear and delayed system: Engine torque control. *Control Engineering Practice, 12*, 417–429.

[8] Guenther, D.W., & Gerhardt, J. (2000). MOTRONIC-torque guided engine manage- ment systems to meet future challenges in emissions and fuel consumption re- duction. SAE technical paper. No: 2000-01-1420.

[9] B. Ashok*, S. Denis Ashok, C. Ramesh A review on control system architecture of a SI engine management system, Kumar *School of Mechanical Engineering (SMEC), VIT University, Vellore 632014, India*

[10] Hendricks, E., & Sorenson, S. C. (1990). Mean Value SI Engine Model for Control Studies. In American Control Conference (pp. 1882-1887). IEEE.

[11] www.maplesoft.com

[12] Zhang, Shupeng, Guoming Zhu, and Zongxuan Sun. "A Control-Oriented Charge Mixing andTwo-Zone HCCI Combustion Model", IEEETransactions on Vehicular Technology, 2014.

[13] "Transient Operation Fundamentals", Diesel Engine Transient Operation, 2009

[14]Andrew P. White, Guoming Zhu, Jongeun Choi. "Linear Parameter-Varying Control for Engineering Applications", Springer Nature, 2013

[15] Mrdjan Jankovic. "Developments in Control of Time-Delay Systems for Automotive Powertrain Applications", Delay Differential Equations, 2009

[16] Ehsani, . "Internal Combustion Engines", Power Electronics and Applications Series, 2004.

[17] B. Ashok, S. Denis Ashok, C. Ramesh Kumar. "Trends and future perspectives of electronicthrottle control system in a spark ignitionengine", Annual Reviews in Control, 2017

[18] Engine Modeling and Control, 2014.

[19] Bai, Yang(Chen, J and Zhao, H). "Studies on SI engine simulation and air/fuel ratio controlsystems design", Brunel University School of Engineering and Design PhD Theses, 2014.

[20] Turbocharging the Internal Combustion Engine, 1982.

[21] "Patent Application Titled "Air-Fuel Ratio Control Device of Internal Combustion Engine" Published On", Life Science Weekly, June 22015 Issue

[22] Zhao, Jinxing, and Min Xu. "Model-based calibration for the control variables of anAtkinson cycle engine", International Journal of Powertrains, 2013.

[23] He, L., L. Li, L. Yu, E. Mao, and J. Song. "A torque-based nonlinear predictive control approach of automotive powertrain by iterative optimization", Proceedings of the Institution of Mechanical Engineers Part D Journal of Automobile Engineering, 2012.

[24] www.epa.gov United States Environmental Protection Agency.

[25] Liu Yingchun, Wang Qi, L.ling. " Transport Properties of Fluids in Micropores by Molecular Dynamics Simulation" Chinese Journal of Chemistry

[26] www.inderscience.com Inderscience Publisher, linking academia, business and industry through research.

[27] teacher.buet.ac.bd Bangladesh university of engineering technology.

[28] White, Andrew, Guoming Zhu, and Jongeun Choi. "Hardware-in-the-Loop simulation of Robust Gain-Scheduling Control of Port-Fuel-Injection Processes", ASME 2010 Dynamic Systems and Control Conference Volume 1, 2010

[29] H Sim. "Development and validation of a dynamic model for a gaseous-fuel engine",Proceedings of the Institution of Mechanical Engineers Part D Journal of Automobile Engineering, 01/01/2004

[30] Chunyue Song. "Optimal Control of Hybrid Framework-Based Powertrain andTransmission Systems", Lecture Notes inElectrical Engineering, 2012

[31] Zhang, Shupeng, Guoming G. Zhu, Yongsoon Yoon, and Zongxuan Sun. "A Control OrientedCharge Mixing and HCCI Combustion Model for Internal Combustion Engines", Volume 2 Legged Locomotion Mechatronic Systems Mechatronics Mechatronics for Aquatic Environments MEMS Control Model Predictive Control Modeling and Model-Based Control of Advanced IC Engines, 2012.

[32] William B. Ribbens. "The Basics of Electronic Engine Control", Elsevier BV, 2017

[33] Zhenjun Xu, Huaizhi Wu, Meiling Wu. "Energy performance and consumption for biogas heat pump air conditioner", Energy, 2010

[34] Yang, Xiaojian, Guoming G. Zhu, and Zongxuan Sun. "A Control Oriented SI andHCCI Hybrid Combustion Model for InternalCombustion Engines", ASME 2010 Dynamic Systems and Control Conference Volume 1, 2010.

[35] Xu, Fang, Hong Chen, Xun Gong, and Qin Mei. "Fast Nonlinear Model Predictive Control onFPGA Using Particle Swarm Optimization",IEEE Transactions on Industrial Electronics, 2015.

[36] Hualei Li, Guozheng Zhang, Huiyan Zhang, Lei Shi, Mingyang Yang, Kangyao Deng."Equivalent matching model of a regulatedtwo-stage turbocharging system for the plateau adaptability", Proceedings of the Institution of Mechanical Engineers, Part D: Journal of Automobile Engineering, 2016

[37] Yildiz, Y.. "Spark ignition engine fuel-to-air ratio control: An adaptive control approach", Control Engineering Practice, 201012

[38] Gong, Xun, Hong Chen, Yanan Fan, and Control and Automation, 2014. Yunfeng Hu. "Idle speed control for SI engine using triple-step nonlinear method", Proceeding of the 11th World Congress on Intelligent

[39] Wu, Yifei Wang, Zhihong Li, Yuanyuan Che. "Characteristic modeling and control of servo systems with backlash and friction.(Research Article)(R", Mathematical Problems in Engineering, Annual 2014 Issue

[40] Li, Kunying, and Bing Xiao. "Research on adaptive feedforward control strategy ofengine based on GT-power and simulink simulation", The 26th Chinese Control and Decision Conference (2014 CCDC), 2014.

[41] Lino Guzzella. "Control of Engine Systems",Introduction to Modeling and Control of Internal Combustion Engine Systems, 2010

[42] J.H. Buckland. "Modeling and control of automotive powertrain systems: a tutorial", Proceedings of the 2005 American Control Conference 2005, 2005