Politecnico di Torino

Department of Informatic, Cinema and Mechatronics engineering

Master degree in Mechatronic Engineering

A low cost normally closed compliant hand prosthesis

Design and development of a 3D printed hand prosthesis prototype that is active, compliant and low cost

Developed in collaboration with Ayúdame3D

Relatori:
Alberto Audenino
Roque Jacinto Saltaren

Candidati:
Daniele Giovanditti

December 2024

Content

Introduction

The aim of this thesis is describing the project prototype for a novel hand prosthesis, created in collaboration with the spanish company Ayúdame3D, that, since 2017, develops and distributes 3D printed prostheses in developing countries.
Following the desire of improving the quality of life of their patients the company was looking to add to their catalog active devices, this is where the context of this thesis takes place.

The project consists of the design and realization of a 3D printed prosthesis that is suitable for wrist level amputees, but could also work for higher level amputations; the main requirements are: external power source, adaptive grasping capabilities, minimal price and availability of the components all around the world. The implementation of all these features represented a big challenge, but also an important stimulus, as the continuous research for better and simpler solutions kept the project interesting and appealing from its beginning to until the very end.

The first part of the thesis will be dedicated to the identification of a complete state of the art for upper limb prostheses; this will comprehend both commercially available devices and publications from researchers and amatorial makers from all around the world.
With the experience and inspiration resulting from these researches the practical part of the project began with the modeling of a first prototype of hand in a virtual environment; this device was cable driven and actuated by a single motor.
The most interesting part about the project surely is the decoupling mechanism that allows the independent movement of each finger; this element will also be central during the evolution of the project that will get through many versions before reaching its final design.
One of the key changes made during the advancement of the activity is the switch to a normally closed configuration: first of its kind, in literature, the hand assumes a closed fist configuration while at rest; this solution allows for simpler and smaller actuation mechanism, that is needed to accomplish all the requirement imposed at the beginning of the project.

The whole thought and evolution processes, as well as the techniques and software used will be described in the thesis, which comprehends also of the results of some tests performed on the final prototype.
In the end some considerations about the performances of the device as well as its future implication will be presented.

1 State of the art

1.1 Common classification

When talking about prosthesis, the range of devices and products comprehended is great. Because of this, a first classification method has been proposed for the upper limb devices that revolves around the actuation method of the prosthesis (Jelle ten Kate et al., 2016). First category consists of unactuated devices which are the most common; from Captain Hook to the paralympic champions, these prostheses are usually static, developed with a variety of material, from the simplest to the high-tech composites; they usually have a merely aesthetic function, or a very specific purpose, but they cannot change their configuration.
Later on, by the second half of the XIX century, some more complex devices appeared on the market, they are nowadays referred to as "body powered prostheses" and they allow the user to actually operate them in order to accomplish some tasks.

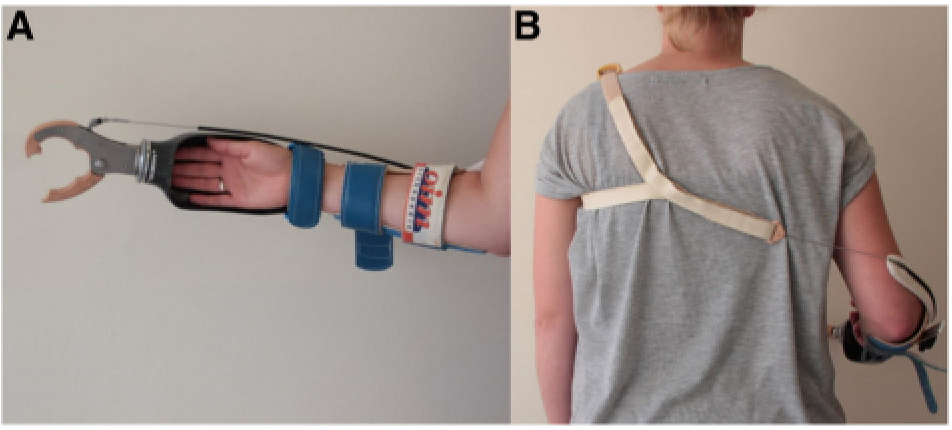

Figure 1.1, Body powered prosthesis by Huinink et al.

These prostheses have some degrees of freedom, and their configuration can be modified by the user by means of physical movements, that applies tension to cables or cranks that allows to close and open the grip, they usually allow a single grasping pose and are purely mechanical systems.

Third category of devices is the, so called, "external actuated device", these devices are characterized by mobile parts that are actuated by some kind of power source. This particular use of words is due to the fact that electrical powered prosthesis are not the only one that belongs to this category, as some pneumatic based devices reached the market and the desks of many researchers, with many of them being based on the inflation and deflation of chambers that works as actuators.
The main benefit of using externally powered prostheses is their functionality and, in many cases, the anthropomorphic appearance. They are controlled by sensors, usually EMG, or EEG, or buttons that allow the user to perform the grip or one of the other functionalities that can be implemented.
EMG and EEG refer to electro-myo-graphic and electro-encephalon-graphic, respectively, they are sensors that perceive the activity of muscles and brain and convert it into analog signals that can later be processed and used to control the prosthesis.

Another important distinction when discussing actuated devices is the one between the possible appendixes mounted on the prosthesis. In fact, the presence of an actual hand at the end of the prosthesis is not mandatory: the majority of the body powered devices, for example, mount grippers referred to as "pliers" that are usually simple but not aesthetically pleasant. The most recent trend is to create human-like grippers that at least resemble the anatomy of the human hand; this still comes at the

cost of higher expenses and lower performances.
In general, pliers are quick and strong, having a simple and effective design that usually allows lower cost, while anatomic hands are way more complex to design, realize and also to actuate, resulting in slower and weaker grasps.

Recent research is also trying to validate the middle way between pliers and actual hands: hand-like prosthesis that are focused on three-digital grasps, allowing simpler design and control while solutioning the appearance.

1.2 Analysis of commercial hand prostheses

In this paragraph some existing models of upper limbs prostheses, both products available on the market and academic prototypes, will be presented, pliers will be excluded from the list as, while still being very interesting to understand and study in particular from a mechanical point of view.
The first model that will be discussed is the Bebionic Hand, one of the most diffused hand prostheses developed and produced by Steepler, bought in 2017 by Ottobock, pictured in figure 1.2.

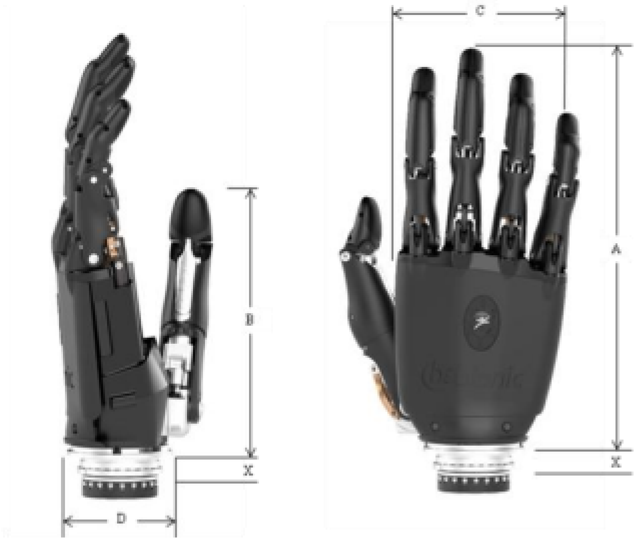

Figure 1.2, Bebionic Hand from Medynsky et al.

Medynski and Rattray (Medynski & Rattray, 2011), describes the device as a myoelectric prosthesis, with multiple pre-programmed gripping patterns, with the objective to provide higher functionalities and flexibility to users.
The hand is composed of five motors, one controlling each finger, that move at high speed with low power consumption, associated with microprocessors that continuously measure position and speed of each finger, granting accuracy during the grasp and multiple gripping patterns such as the hook and the pinch.
Fingers are independent of each other, and are connected to the actuators through screws and elastic elements in nylon, allowing for natural movements. There is also a mechanical system that protects the device from overloads, while each component can be easily substituted in case of break.
The thumb abduction has to be performed manually by the user, with the mechanism locking in two different positions with a locking pin; depending on the thumb position and the myoelectric signal provided, the hand can perform 14 different grasps, with the "autogrip" feature that allows the hand to

sense the slipping of a grasped object and automatically correct the strength.. The software allows the user to personalize the input sensitivity and the various grasping settings.

The actual cost of the hand is between 30 and 40 thousand of American dollars, not far from his main competitors: iLimb and Michelangelo hand, that are priced around 40-50 thousand of dollars.
The iLimb mounts five motors, and has similar functioning to the Bebionic, while Michelangelo, produced by Ottobock and showed in figure 1.3 has a central mechanism associated to an higher power motor to which two fingers and the thumb are connected, the last two fingers passively follows the first two; a second motor allows to control the abduction of the thumb.

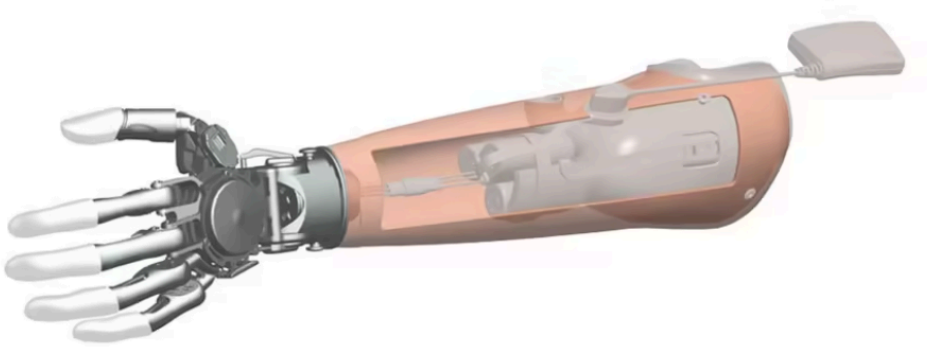

Figure 1.3, Michelangelo Hand 3D model, from Ottobock official website

In their review (Belter et al., 2013) the authors describe and compare various models of hand prosthesis, considering also the feedbacks from various users; the authors suggests that the upper weight limit for a functional device is 500g, and that the optimal closing speed for fingers is 230º/s, while the minimum acceptable is 115 º/s.
It's interesting to note the similarities between the various finger designs, as pictured in image 1.4. All the main competitors, in order from left to right iLimb, Bebionic and Michelangelo, opted for lever-based mechanism that allows them to perform the full finger closure and opening with a single degree of freedom.
The authors also discussed the importance of brushless motors as opposed to the common brush motors and the importance of compliance, that consists of the ability of the hand to adapt the grasp to the object shape; this is usually achieved with elastic elements or, with minor effect, with soft covers.

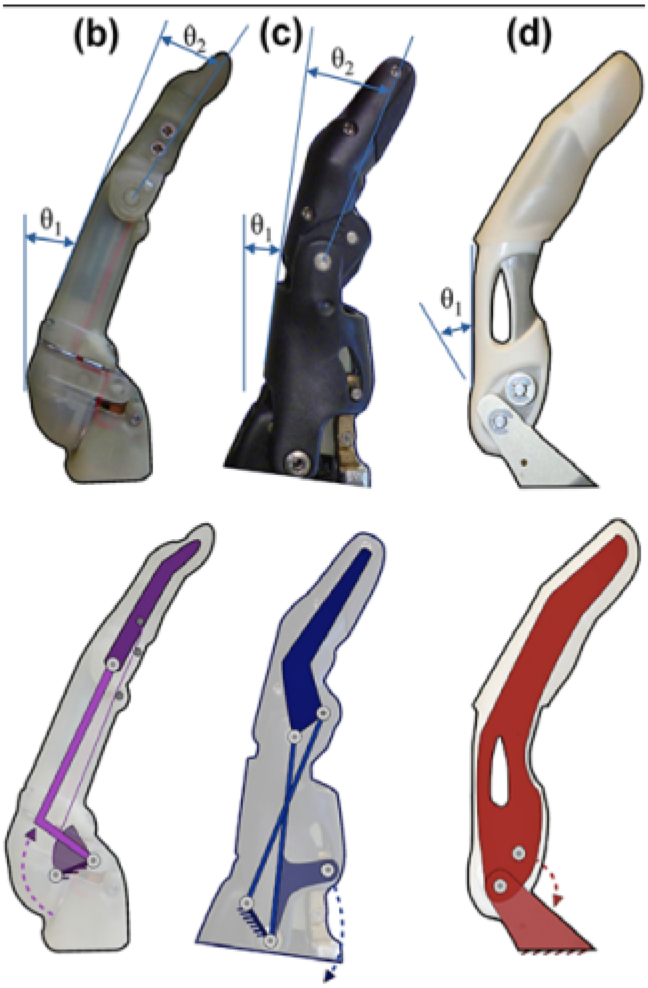

Figure 1.4, Various finger designs, from Belter et al. 2013

Some honorable mentions are the SQUSE hand, an experimental prosthesis mounting 22 actuators, able to perform highly dexterous manipulations with accurate and anatomical movements; the obvious drawback is the complexity of control, as the number of input needed for this model is so high that the model has been considered unusable at the time of his proposal, before the EEG technology became popular, and, because of this, confined to industrial robotics applications.
Another interesting device is the Zurich-Tokyo Hand, which relies on a multitude of pressure, position and torque sensors to automatically adapt to the shape of the object being grasped, with AI based controllers.

1.3 Analysis of 3D printed hand prostheses

Another field of interest is the world of 3D-printed prostheses, deeply examined in the article (Kate et al., 2017) that aims to provide a full picture of the devices and technologies currently available, the article describes and compares multiple 3D printed prostheses, providing a general idea about them.

One of the first data that comes out is that the majority of the devices were developed for children, with a serious lack of information about their mechanical properties and capabilities.
3D printed prostheses are rarely full hands, instead there is an abundance of partial hands, upper arm or full arm prosthesis, with the biggest part of the hand prosthesis being body powered, as shown in figure 1.5.

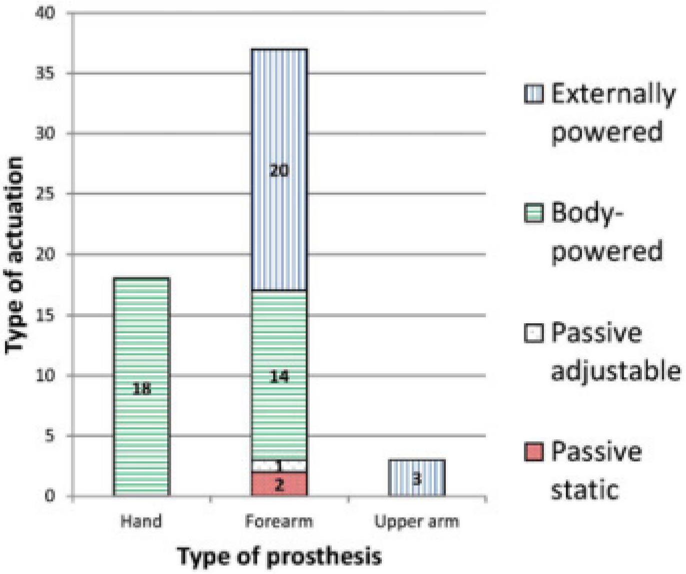

Figure 1.5, Graph about the actuation method of 3D printed prosthesis, by Kate et al., 2017

The study highlighted that the most common method to produce these devices is the FDM, acronym of Fused Deposition Molding, an additive manufacturing technique that consists in the deposition of drops of polymeric material at high temperature, at which it assumes a semiliquid state.

As the range of proposed devices is very wide, with both companies and amatorial makers publishing their designs, most of the prostheses share cable systems as power transmission methods, as shown in figure 1.6.

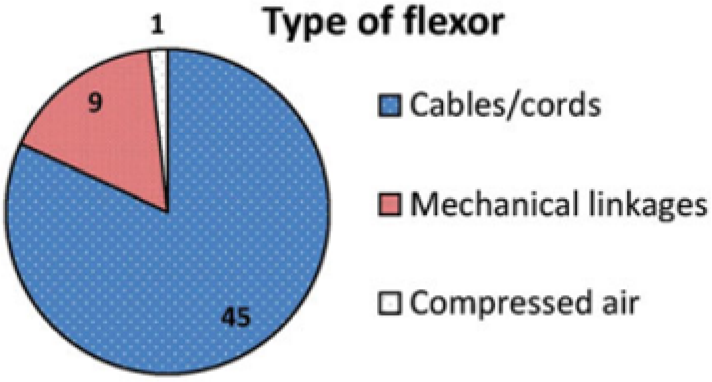

Figure 1.6, Chart describing the transmission method used for the flexor, by Kate et al., 2017

The study also highlighted that, while the range of motion of the human fingers is 85 º-110 º-65 º, respectively for the metacarpal, the proximal and the distal joint, only one third of the prostheses accomplished the full range of motion; furthermore, the same proportion is true for the number of prosthesis that are able to perform an adaptive grasp, by controlling each finger independently.

In order to provide better context for the following chapters, the Nelly hand, by Ayúdame3D, will be taken as an example to describe the 3D printed category of prosthesis, shown in figure 1.7.

Figure 1.7, Nelly hand by Ayúdame3D official website

The device consists of 3 main parts: wrist, that also functions as a liner, holding the prosthesis onto the user arm, a palm section and the fingers, each finger consists of 2 links, held by two joints, in each of them there is a rubber band that, while in tension, hold the finger in open position, the flexion is instead given by the cables attached to the wrist.
This mechanism allows the patient to flex the wrist, applying tension to the cables that run across the whole device, and are attached to the extremity of the fingers, this results in a torque to them, that will close the fingers, performing the grasp; this control method allows the patient to adjust the grasping force and is very intuitive, as the prosthesis is mainly designed for children.
Of particular interest is also the wrist, whose shape is easily adapted for each patient, as it is a separate element, printed apart from the rest of the hand, after the production the result is a flat surface that will then be slightly heated and molded around the user arm.
The whole cost of the prosthesis is less than 10 euros, consisting of the printing filament, the nylon cable, the rubber bands and a fixing velcro band, all of this is easily available everywhere around the world.

This device is on the lower end of the range of costs as, according to Belter et al. and Kate et al., the price for 3D printed hands can vary between 5 and 500 euros, the higher costs include also the components to make the device work, including motors, sensors or any other component.

After considering the prostheses available at the present time, both on the market, in prototype form or online as printable models, it's clear that hand prostheses are very complex devices both mechanically, aesthetically and from a control point of view.
Most of the market oriented devices are produced in aluminum, for greater durability and low weight, while the prototypes and the maker-developed models are made in plastic.
The cost gap is very high between the two types of prosthesis, as well as the functionalities; industrial devices cost 40 thousands of dollars, on average, and offer the user a simple control and multiple

grasping patterns. This is made possible by robust control software and precision mechanics, pushing the price very high, to this also contributes the impossibility of serial production given the strict tolerances involved and the reduced number of users that can afford such devices.
On the other hand, cheaper devices are possible but they come at the cost of single grasping poses and, with lower costs, also weaker controlling algorithms, if any. These devices are more customizable, as they can be easily tuned and resized for each patient, since no dedicated production machines are needed, but their mechanical properties are generally hard to predict.
Furthermore, commercial prostheses usually prefers gearbox based power transmission, that is accurate and, if finely tuned, characterized by very low dissipation and better resistance; other devices tend to design tendon driven mechanisms, as non-industrial gears are very imprecise and characterized by high dissipation, with poor mechanical properties; the use of cables implies more complex control, less precision and freedom of movement, as well as making the adaptive property harder to achieve.

With these considerations it's now possible to start the discussion of the work done in this thesis, which has been highly influenced by the information learned during this research phase.

2 Description of the project

2.1 Background and objective

The following thesis project derives from the collaboration with the company Ayúdame3D; this company, born in 2017, was created with the aim of distributing 3D printed prosthesis to children in developing countries; the project started in Kenya but quickly spread in many African and, recently, worldwide countries.
The objective of Ayúdame3D is to develop and share devices that help in the daily life of childrens and, lately, adults all around the world; these tools are not necessary medical devices, but are cheap, safe and useful.
The company, at the beginning of this thesis project, already had three different prosthesis models, namely Nelly, Mary and Vicky, that are meant for user with hand lack, trans radial amputations and over-elbow amputation, respectively; all of them are body powered device, and are frequently remodeled to fit each patient the prosthesis are donated to.
In this context, there was a plan to introduce more advanced prostheses, so, the objective of this thesis is to develop a concept and produce a prototype of a 3D printed external actuated prosthesis that stays within the company's canons, being compliant, affordable, robust and easy to use.
The prosthesis must be a self contained hand, suitable for wrist amputees but also for people with higher amputation level that wear some kind of socket over their stump.

2.2 Definition of the design parameters

Given the specifications, it was very important that the chosen design is easily 3D printable and uses only components that are available all around the world, including at least a motor that actuate the hand and a sensor for its control; the price bar for the project was set to 200 € and had a big influence during the design process.
The research that was done about the state of the art highlighted some key features that a prosthesis must have, first and foremost the weight has to be reduced, this implies a low number of motors, as they are usually the heaviest and most expensive components.
Another key feature would be implementing an adaptive grasp, currently rarely achieved in 3D printed prosthesis: this would allow the finger to automatically adapt around the shape of a grasped object;

even more complex is the reduced possibility of utilizing sensors, as each sensor implies a cost related to itself, its power supply and the electronics.
Furthermore, the hand should be self-contained, meaning that there should be no external device or mechanical component, and should have a battery lifetime of at least 8 hours.

Figure 2.1, Example of precise three-digital grasp performed with a Nelly, form Ayúdame 3D

The company also experimented with a particular finger configuration that allows the user to perform a single grip, while achieving both a precision tridigital and power grasps, with the thumb in opposition. With smaller objects the hand will close in a tradigital grip near the tip of the fingers while, if no obstacle is encountered or if there are bigger objects, the prosthesis will normally close with a cylindrical shape. This peculiar configuration should be kept in the to-be-designed device, as it was largely appreciated by the users, an example of it is shown in figure 2.1.

Another known point was to take the same route of many other hand prostheses with an underactuated mechanism, indicating a system that has less actuators than degrees of freedom, in particular, after a first estimation of the hand cost, with the motor being about 30% of the total cost, it was chosen to design the prosthesis with a single actuator. This choice implies easier control and fitting inside the device and, clearly, it comes at the cost of having to design a mechanism able to transmit the power from a single power source to all of the five fingers.
These considerations lead also to analyzing the power transmission method for the fingers: the most accurate approach, used by most of the market oriented prosthesis, consists in gearboxes that allows for fine position control and low power dissipation. This gets in contrast with the production method chosen for the device, as 3D printed gearboxes are far from efficient and precise; furthermore, the polymer layers tend to consume and separate under the friction forces, giving 3D printed gears a very short lifetime. For these reasons, the options were thinned to cable driven and lever mechanisms, but

the discussion of this final choice is postponed, as it has implications in all the other fields, from the decoupling mechanism and the adaptive grasp to the backwards motion and the space available.

In order to achieve the before-mentioned adaptive grasp, two things are necessary: fingers with multiple joints, that are able to wrap around the object being grasped, and a mechanism that allows the fingers to move independently from each other, so that, if one of the fingers makes contact with an object, the others can keep their motion, following the closure of the hand. With the combination of these factors, it's theoretically possible to adapt the grasp to any appropriately sized shape.

While designing the articulated fingers can be considered trivial, as many different models to take inspiration from can be found in literature, way harder is the production of the decoupling mechanism, even though some examples have been proposed. The most interesting is the spring-based approach (Dechev et al., 2001), in the article the authors suggest that it's sufficient to interpose compression springs between the actuation mechanism and the fingers that, in this example, are designed with a lever mechanism. The idea is that when the actuator pulls, to close the grasp, if there's no force applied to the fingers, they will just follow the movement and close; when, instead, they meet an obstacle, the spring will begin to deform, letting the finger steady, while the rest of the system can follow its motion.

Such a great idea resulted, initially, in problems when reported to physical prototypes, as there was some unbalance between the fingers and the thumb, resulting in the impossibility of grasping smaller objects. While solving this issue would normally require force sensors, the authors also proposed a mechanism that attenuates this unbalance, consisting in a cylindrical enclosure system for the compression springs, connecting each finger to a common drive bar that will be moved by the motor.

According to the authors this solution solves the problem and the prosthesis is fully functional, however, some issues with smaller objects still exist, and the balance of the spring is very precise, achieved with industrial products, and hard to replicate.

While this solution might be optimal for some prostheses, the need for simplicity, space saving and robustness lead in a different direction. The inspiration for the first mechanism comes from a combination of two different articles, the first of the two being published by A. M. Dollar and R. D. Howe (Dollar & Howe, 2010), here the authors proposes a robotic gripper that has similar properties to those of a prosthetic hand, where, the most interesting part for the aims of this thesis is in the proposed actuation method: the gripper is composed of 4 fingers, opposed in couples, that are actuated by a single mechanism through a cable-pulley system that allows the fingers that make contact with an object to stop, while the others keep their closing movement. The system, showed in figure 2.2, achieves its function thanks to pulleys that distribute the traction to the tendon-like cables like a differential mechanism would do, in particular, in this case, there is a central differential, connected to two more cable-pulley differentials between the actuator and the fingers.

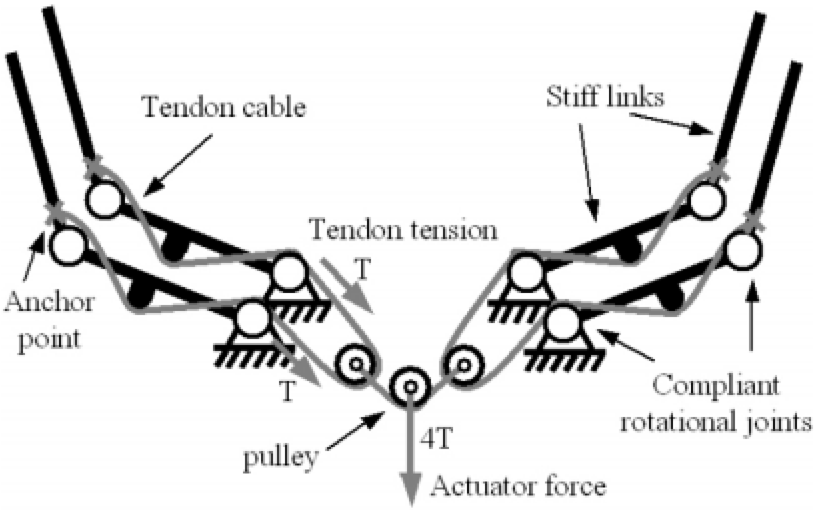

Figure 2.2, SDM Hand actuation mechanism, by Dollar and Howe, 2010

Interesting is also the design of the fingers, developed in a common 2-joint design, they are thought to wrap around the objective and are also adaptive themselves, as stated by the authors, as the cable system allows to close each phalanx independently from the previous one, while, in many other prototypes, one of the reported issues was that, once the proximal phalanx made contact with an object, the whole finger would stop.
The whole mechanism proposed in the article is very interesting and seems fitting the requirement of being 3D-printable, even though the assembling phase could become very problematic, as well as the design of the rails for each pulley.

Another prototype (Lalibertè et al., 2010), describes yet again a single actuated, adaptive, device; the idea of the adaptive finger is presented with a triple phalanx finger, actuated again by cables that are organized in a more complex geometry with respect to the Dollar and Howe model, enabling the achievement of a similar behavior. The biggest interest should be given to the differential mechanism that substitutes the pulleys with a series of levers, as shown in figure 2.3.

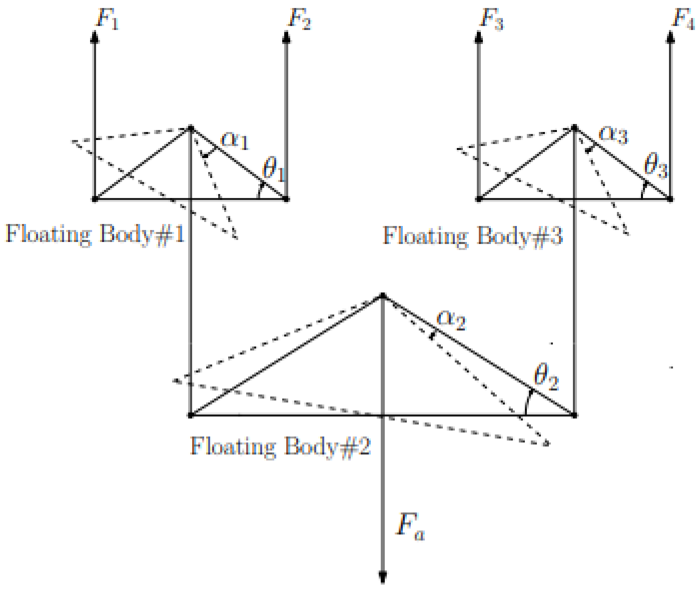

Figure 2.3, Theoretical scheme of the decoupling mechanism proposed by Lalibertè et al., 2010

Three levers compose a double state differential mechanism that distributes the power to all the fingers while, at the same time, allows each of them to stop, independently of the others; this is achieved by a levers based-system, where the actuator is connected to the pern of the first lever, the lever of the second state are connected to the ends of it, in the second states the input is connected to the pers, while the fingers are connected to the ends of the lever bar. The rotation of these bars is what allows the decoupling of the fingers, in fact, when one of the fingers stops, the motion is still transmitted to the other as the lever rotates around the pern, which keeps moving.
This system is very interesting as it seems fairly simple and 3D-printer friendly, on the other hand making it robust in a 3D-printed prosthesis is far from being trivial, and the range of decoupling between the two fingers is limited by the length of the levers. Apart from these issues, the system has also been employed in another prototype with good success (Hussain et al., 2018).

The same authors also published a review of multiple differential mechanisms (Baril et al., 2010), between those one in particular jumps to the eye as being especially suited for this thesis purpose, its schematics are shown in figure 2.4.

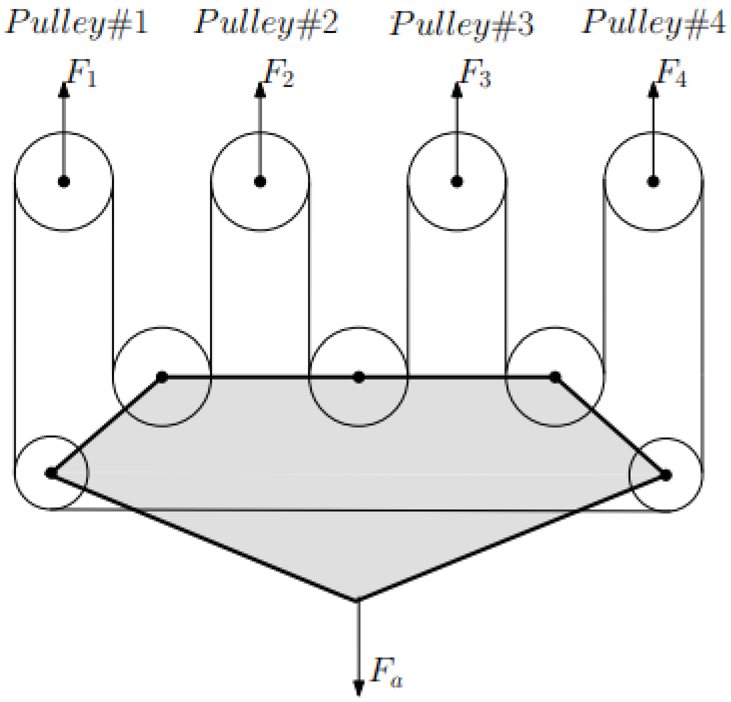

Figure 2.4, Fixed closed-loop-cable decoupling mechanism, by Baril et al., 2010

The differential is pulley based, developed for the four fingers, it presents four moving pulleys whose centers are connected to the tendons actuating the fingers: between those and the pulling motor, five pulleys are fixed to a floating main body that's directly connected to the actuator. A closed loop cable runs between the pulleys, as shown in figure 2.4, and the tension in it, as well as the possibility of the pulleys to translate and/or rotate, allows a single actuator to execute an equal force on each finger's pulley, while granting the decoupling. In fact, while there is no obstacle, the force is equally distributed to the 4 pulleys while, if one of the fingers meets an obstacle, its relative pulley stops, but the others are still free to keep their motion thanks to the tension in the closed loop cable.
This system is the most compact presented until now, it's fairly simple and can be easily 3D-printed: the four pulleys and the main body, with the five fixed pulleys, are supposed to be floating thanks to the tension that's maintained between the fingers and the actuator, leading to a friction that's almost null.

Given the various systems described and their characteristic, this last differential mechanism seems the best fitting for the application, being more compact, but also floating, as this solves one of the main issue with 3D-printed mechanisms, which is the very high friction; still, the use of this differential implies that the actuator should pull the mechanism in order to apply tension to the finger's cable and close the hands, as that's the movement for which the decoupling is necessary.
The opening motion of the hand has to be discussed: all the differential mechanisms described are cable based, as those that rely on gearboxes are clarified as unsuited for 3D printing; the main issue with cable actuation is that it is unidirectional, as the force that transmit the power is the tension. Because of this, cables can only be pulled and not pushed, meaning that, for backwards motion, the device can not make use of the same actuating motor that is used for closing the grasp.
In order to apply backwards tension, something has to pull the mechanism from the opposite side with respect to the actuator, it could be done with a second motor, but this would contrast with the single

actuation idea. Another solution could be that the same fingers apply this tension to the system keeping, at the same time, the tension that is necessary for letting the differential float. In order to transform the fingers into actuators, what can be done is to place springs into their joints; while the nature of these springs has to be discussed, the confirmation of the good basis of this idea came by the fact that many other prototypes that implement cable driven mechanism use springs for the backwards motion.

As discussed before, springs are a major fount of power dissipation, but the same would be the high friction between 3D printed parts in relative motion, because of this the compromise had to be accepted and, for seek of simplicity, the solution has been approved by all parties involved in the project and, with it, the development could begin.

2.3 Software utilized

In order to develop the project, various software for the simulation of mechanical system have been examined but, finally, the decision fall onto MATLAB Simulink that, thanks to its Multibody library, allows the user to insert into the model solid objects, cables and more, allowing to move them through joints, simulating also actuators and sensors.
The software was chosen over others because of its apparent simplicity and the familiarity of some parties involved in the work with the library in question.
The objective of the simulation, in the first part of the project, was to test the dynamics of the mechanism and the fingers; later on, more experiments will be done regarding the sizing of some components.

A Simulink model containing the full hand prototype can be quite difficult to build, and also to manage for an ordinary computer, but the utility it can provide is surely worth the effort. In figure 2.5, capture of one of the last built models can be seen.

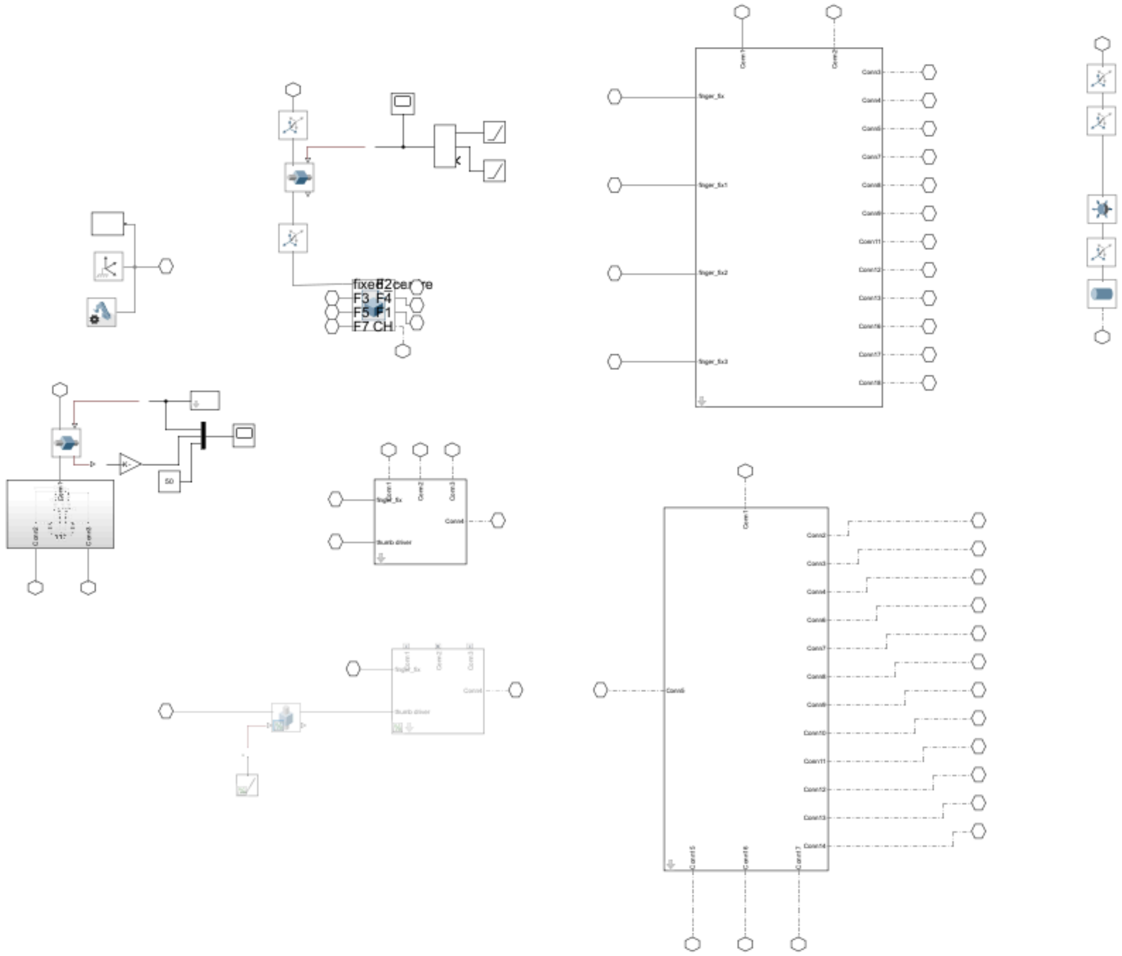

Figure 2.5, Screen capture figuring the model of the hand prototype

The before mentioned software, Simulink, is a MATLAB extension designed by MathWorks for modeling and simulation of dynamic systems, commonly used for control tasks, but also industrial planning and multidomain system representation; with time, a multitude of libraries have been developed, expanding the range of utility of the software even wider. In the case of this thesis the library Simscape Multibody has been largely used.

The base of Simulink is the representation of a system by means of blocks and connection between them, connections that imply the passage of information like states of the system, measures obtained by a virtual sensor or simple signals. Blocks can receive and emit information but also interact with them, executing mathematical or logical operations, but also executing complex algebraic computations or just changing the shape of those data, they are identified as geometrical shapes in the model, while the connections are usually simple or dotted lines.

The addition of Simscape multibody allows the user to insert in the model 3D elements and manage their states and relationships. Objects are imported in the for of STL files, a commonly used format that transmit the information about a 3D shape by dividing its borders in small triangles, so they are characterized by a set of surfaces and it's possible to define body properties, such as mass and inertia, but also frames, that are reference points associated with a coordinate system; a capture of a solid object block interface is shown in figure 2.6.

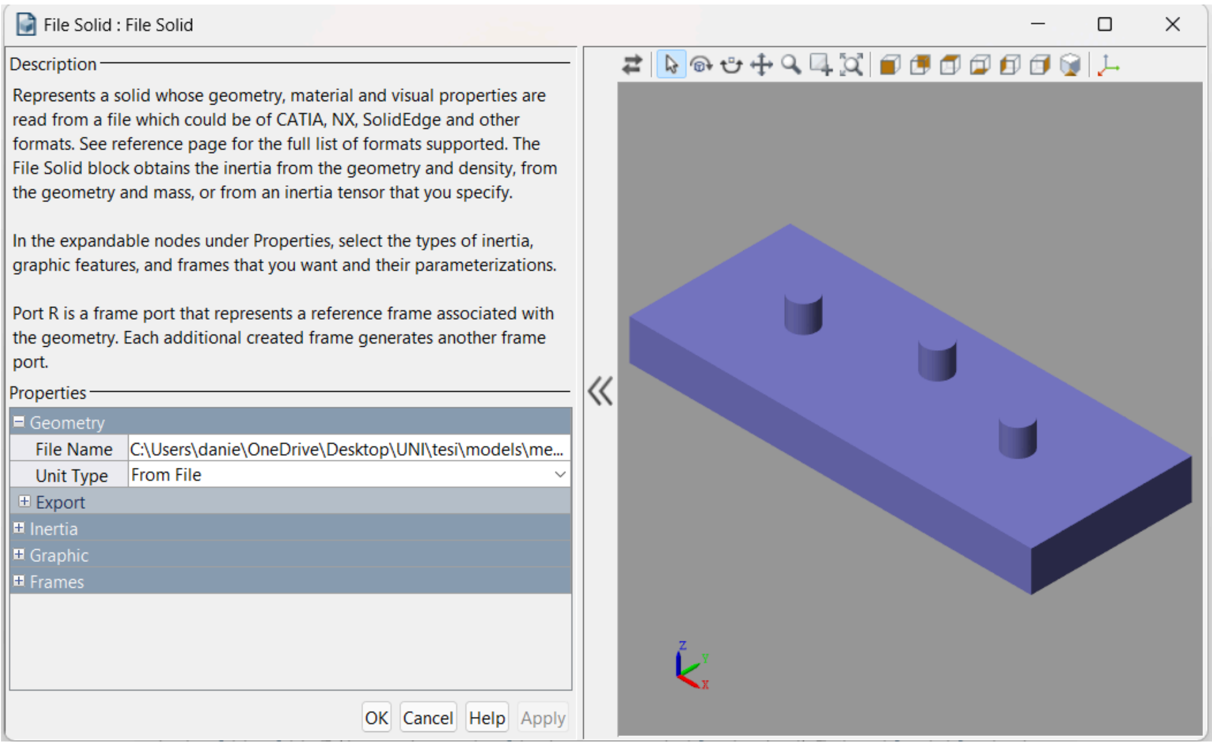

Represents a solid whose geometry, material and visual properties are read from a file which could be of CATIA, NX, SolidEdge and other formats. See reference page for the full list of formats supported. The File Solid block obtains the inertia from the geometry and density, from the geometry and mass, or from an inertia tensor that you specify.

In the expandable nodes under Properties, select the types of inertia, graphic features, and frames that you want and their parameterizations.

Port R is a frame port that represents a reference frame associated with the geometry. Each additional created frame generates another frame port.

File Name C:\Users\danie\OneDrive\Desktop\UNI\tesi\models\me...
Unit Type From File

Figure 2.6, Capture of solid object block interface

Frames function as the connection points for the body, as each frame is an open port for connections, to them it is possible to attach other objects or joints, another key element of the library: they allows to insert degrees of freedom between the bodies, just like in real life, each object not connected to a joint will be considered weld in place to the frame it is attached to.

For the seek of this work, are also fundamental the virtual sensors that can be placed in the model, usually connected to the joints; they allow to measure position, force, speed and many other values important to understand the dynamics and what's wrong with the simulation. A particular kind of sensor is the contact sensor, it detects collision between the outer surfaces of different bodies and elaborate the resultant force of this impact; this is done, for example, in a dedicated block of the model called subsystem, that allows to group all the blocks and connections related to each other, making the whole model more readable, the one in example is expanded in figure 2.7.

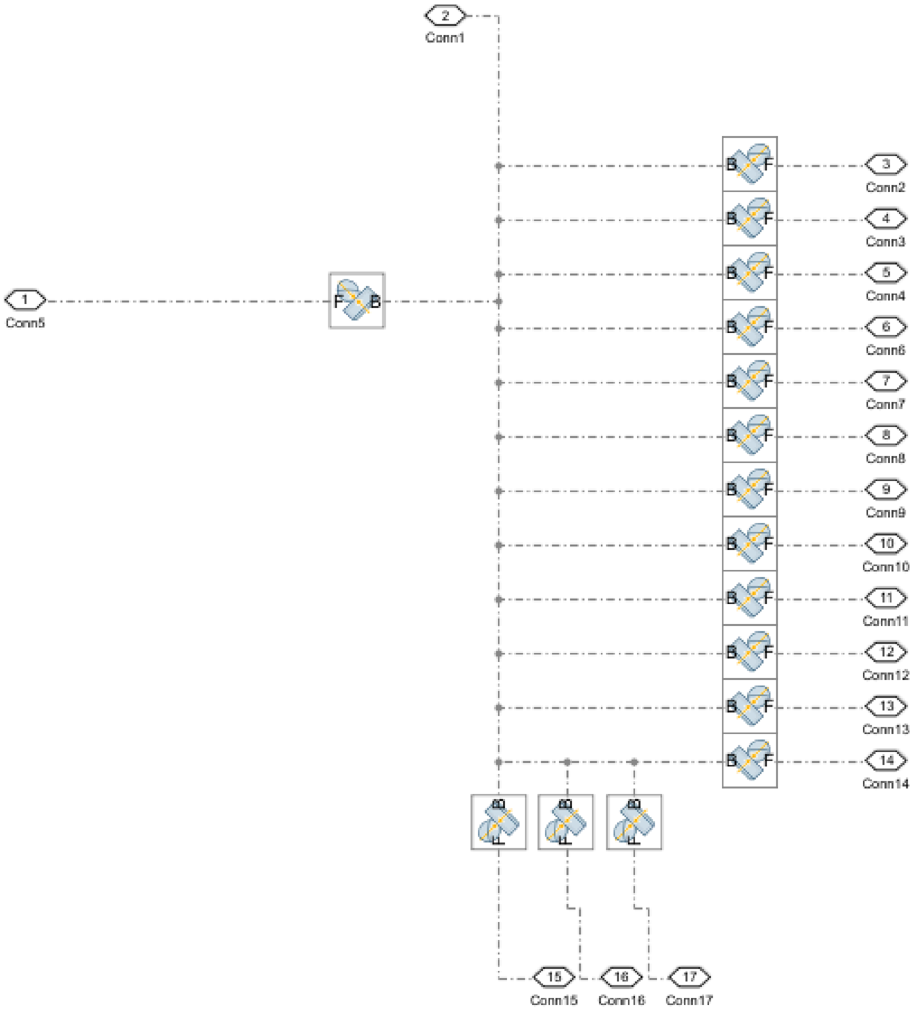

Figure 2.7, Capture of the inside of the subsystem for computation of contacts

Inside the subsystem contact sensors can be seen, their interface is shown in figure 2.8 where contact method can be selected, with the spring-damper being the more realistic one. Other parameters, namely stiffness, damping and region width, should be defined according to the material properties of the involved objects; particularly hard is the tuning of those parameters that can make the system truly unstable, in order to grant a quicker way of modifying those parameters, they were associated to variables defined with the subsystem, shared by all the contact blocks related to the same materials.

With this quick summary of the functionality of the software employed for the simulation, it is possible to follow with the presentation of the first model and its virtual twin.

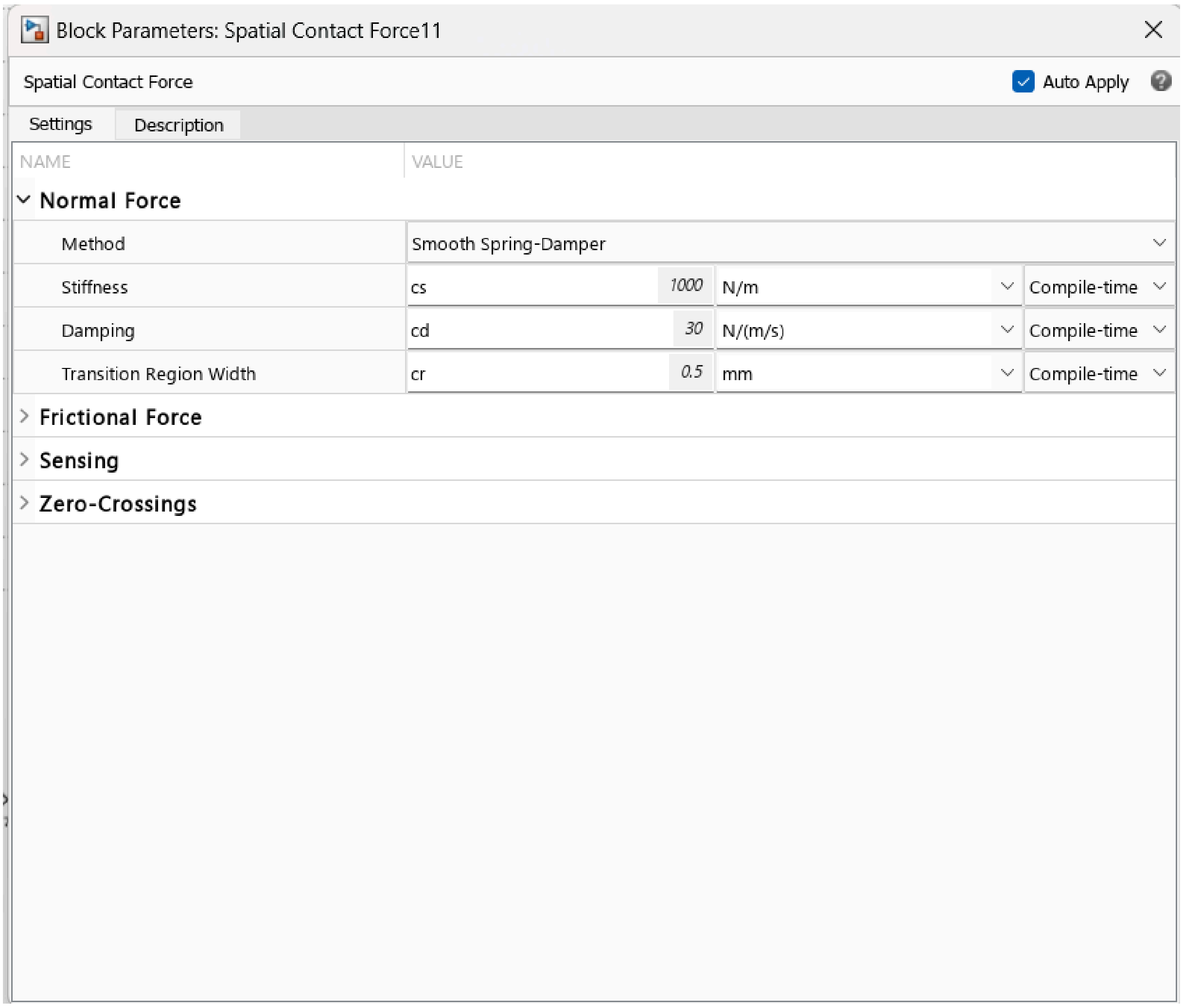

Block Parameters: Spatial Contact Force11

Spatial Contact Force ☑ Auto Apply

Settings | Description

NAME	VALUE		
Normal Force			
Method	Smooth Spring-Damper		
Stiffness	cs 1000	N/m	Compile-time
Damping	cd 30	N/(m/s)	Compile-time
Transition Region Width	cr 0.5	mm	Compile-time
Frictional Force			
Sensing			
Zero-Crossings			

Figure 2.8, *Capture of the interface of a contact sensor*

3 Prototype designs

3.1 First design

In order to show to the rest of the parties involved in this project the designed differential mechanism and its functioning, the first objective of the simulation was to implement that part of the device.

In figure 3.1 a capture of the output of the simulation can be seen, in this simplified model the closed loop cable is shown in orange, while the central mechanism and the pulleys are gray, these lasts are the floating elements in the upper-right portion of the image, each pulley will be fixed with the actuation cable of each finger.
As expected, the mechanism performs very well in the virtual environment, as it pulls all the pulleys at the same time while there is no resistance, otherwise, if one or more finger's pulleys are locked in place, the others keep moving.
To achieve this apparently simple simulation, the block scheme in figure 3.2 has been built.

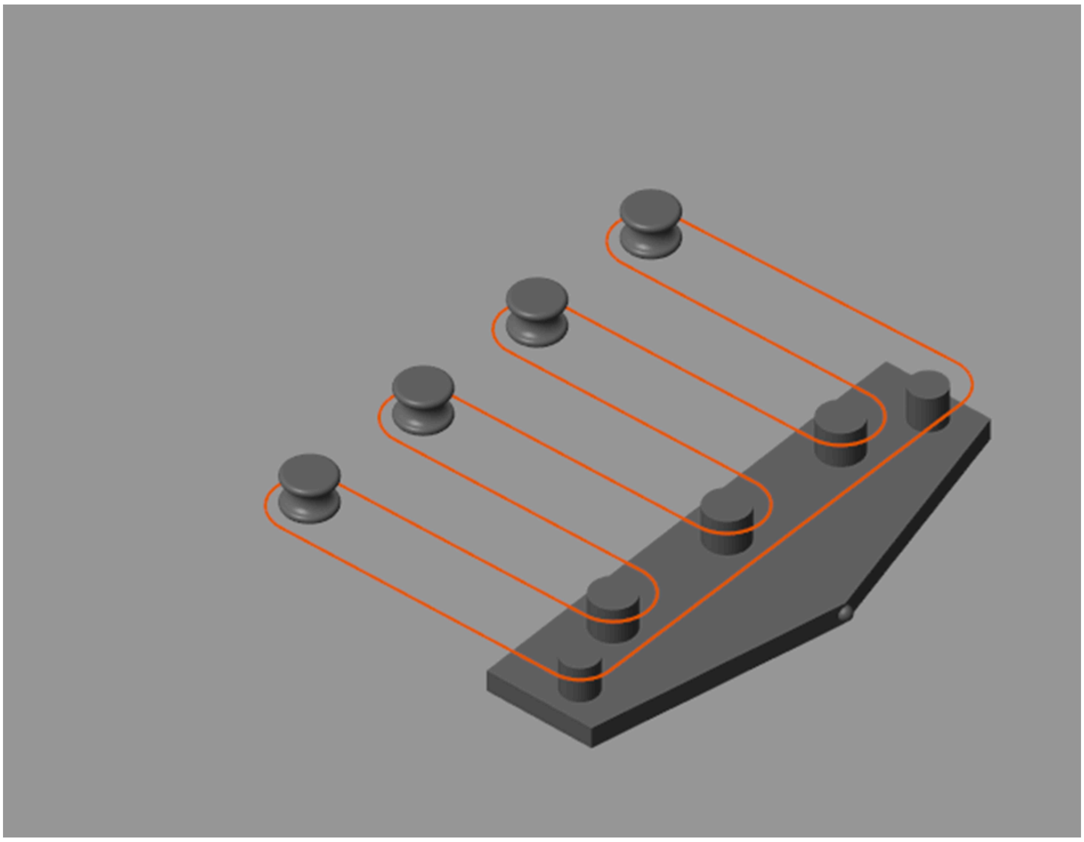

Figure 3.1, Capture of the simulation screen

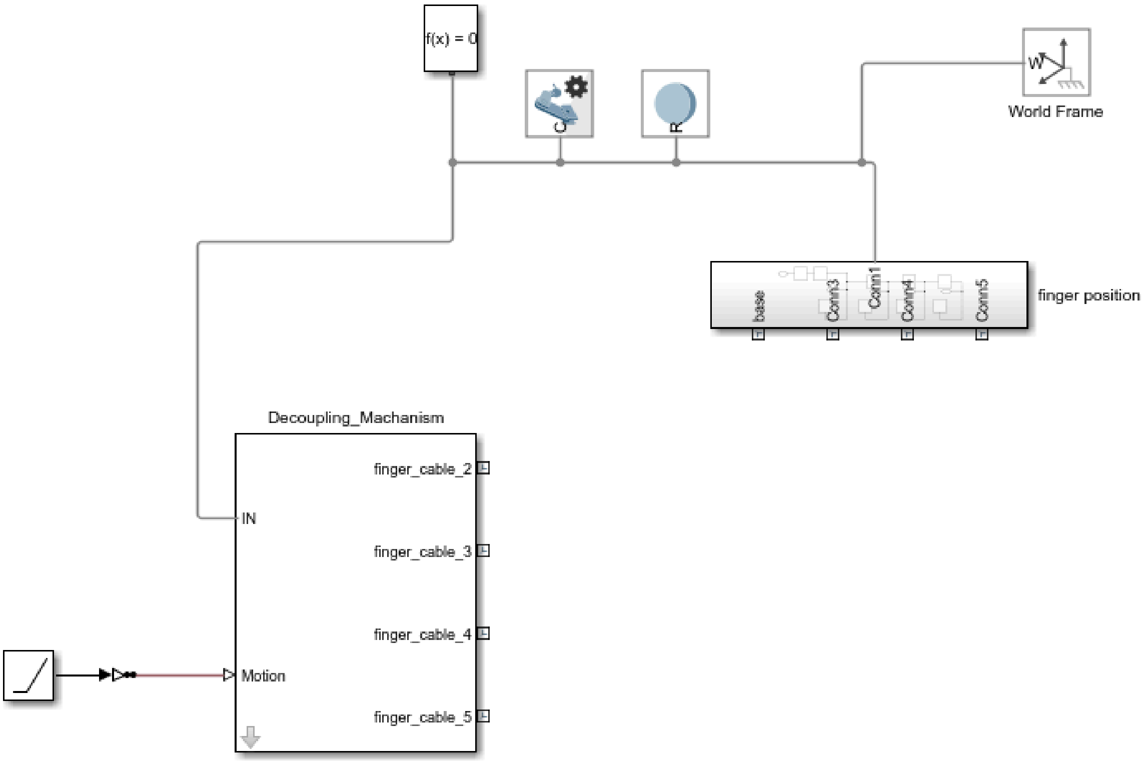

Figure 3.2, Capture of the Simulink scheme for the simulation of the decoupling mechanism

In the upper part of the scheme there is the reference frame, called *World Frame*, that will function as a zero for the simulation environment, to it a sphere solid, for the visualization, and the solver block are connected; the solver is a block that allows the computation and solution of the whole simulation, when paired with the function block identified as *f(x)=0*.
Calling this group of blocks the Zero Block for the rest of the document, there are two subsystems connected to it, one that envelopes all the blocks related to the main body of the differential, while the second one defines the finger's pulleys.

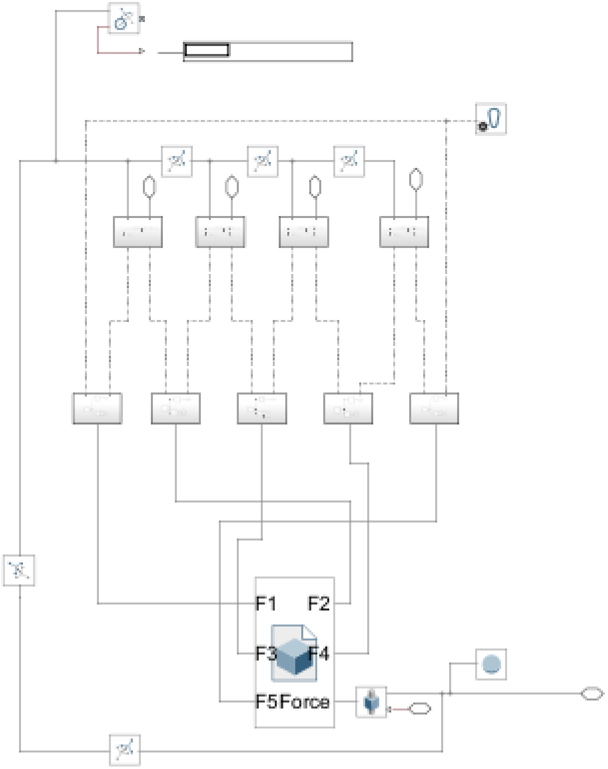

Figure 3.3, Capture of the inside of the Decoupling Subsystem

In figure 3.3 the inside of the decoupling subsystem is shown, the main element is the solid block with the simply designed mechanism. In it, six reference systems were defined, one for each pulley that should be placed on it; these are not figured for simplicity but are still simulated. The first reference is used as a reference for the motion of the mechanism, being directly connected to a prismatic joint receiving an input ramp signal, the other five are connected to more subsystems analogue to each other; they allow to implement the closed loop cable system, the inside of one of them is shown in figure 3.4.

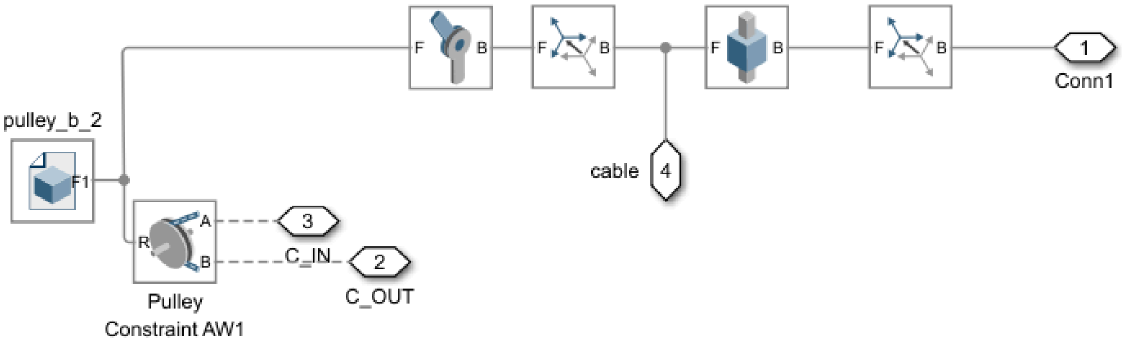

***Figure 3.4**, Capture of the inside of a Pulley Subsystem in the decoupling group*

Inside the subsystem there is a pulley block, that’s connected to the cable connection inputted in the subsystem, to this the solid representation of the pulley is connected, that’s nothing more than an aesthetic object in this case; connected to the same pulley block there is a revolute joint, that allows the pulley to rotate in place, connected to a prismatic joint that allows it’s translation, just before it, an output allows to connect to this point the cable that will actuate the related finger, while after the prismatic joint another connection fixes the reference point for the pulley position.

In this subsystem, force and position are measured at the joints in order to understand the load on each element, that is proved to be equally distributed among the four finger’s pulleys, and the range of motion of each pulley.

Next, the fingers were designed and tested in particular, for the first iteration, a very simple design was chosen, shown in figure 3.5. In the picture, the cable path was built of a series of pulleys visible from the side, this is just a simulation expedient for showing the design.

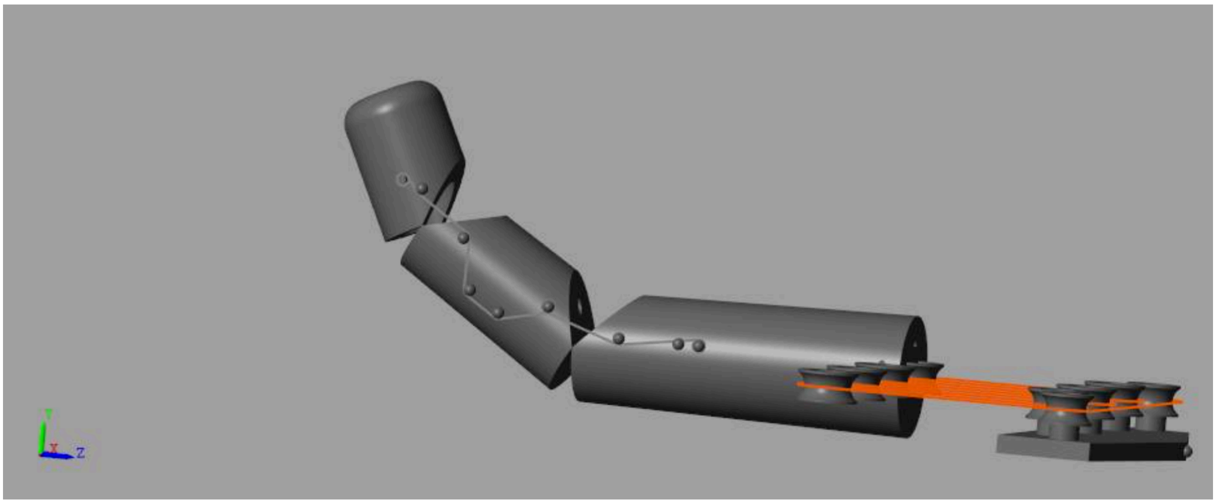

Figure 3.5, Capture of a video showing the finger closure motion

The simulation was further developed by implementing the four fingers and the palm containing the mechanism, resulting in the first full hand simulations that have been captured in the figures 3.6 and 3.7, respectively with no constraint and only one finger free to move.

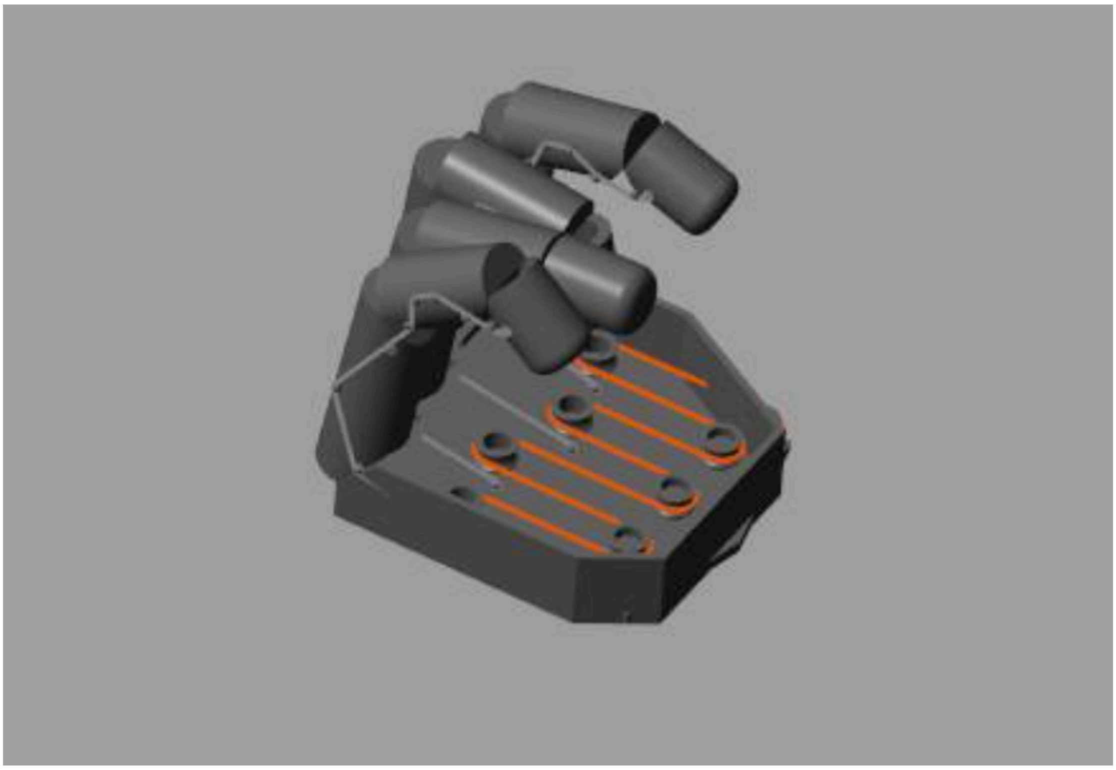

Figure 3.6, Capture of the simulation screen

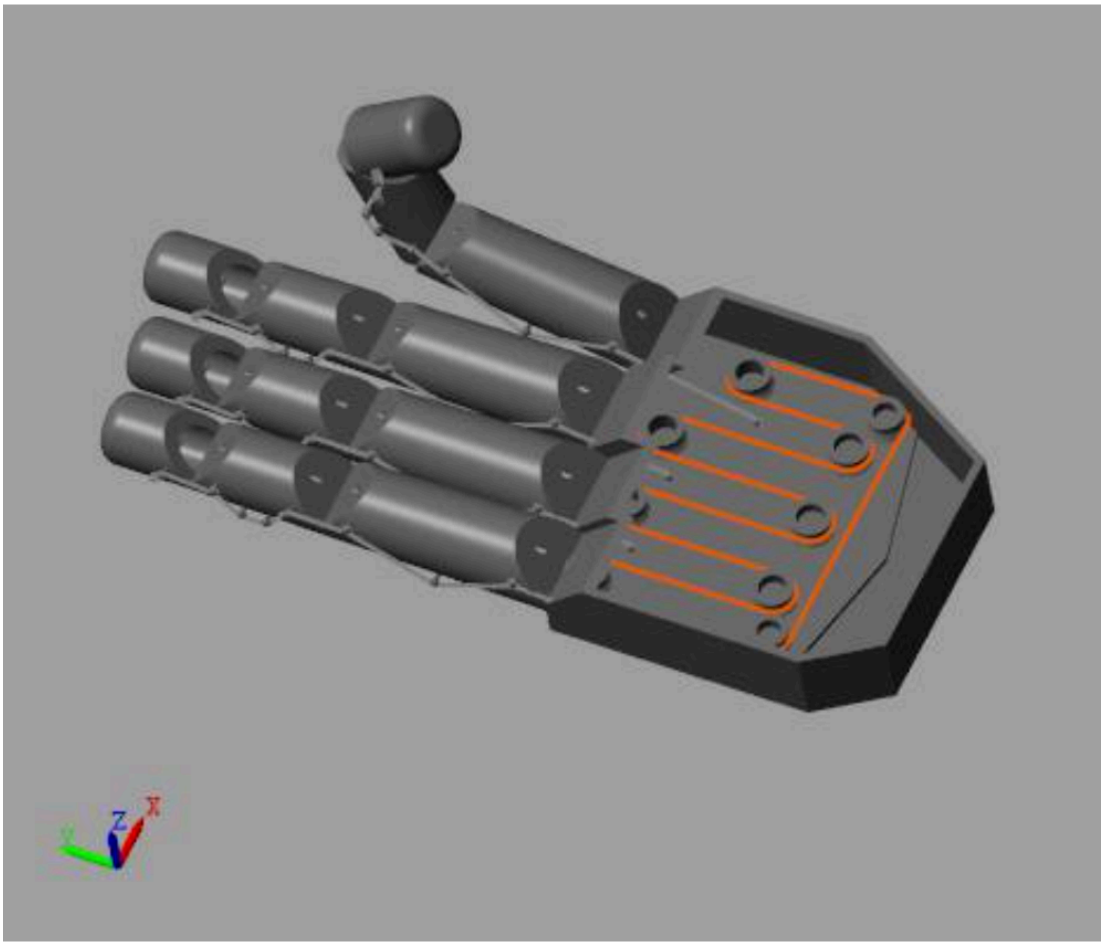

Figure 3.7, Capture of the simulation screen

With these simulations, the maximum extension of the finger's pulleys was calculated to be equal to 28mm, this implies that the minimum distance between the pulleys and the mechanism, as this will be needed in the case of finger locked in the opening position, as well as a minimum distance between the differential's endpoint and the border of the palm.

After completing the four fingers the thumb is designed, and it will be placed in opposition to the index and annular, in order to achieve the desired grasp, with an angle of 20º; given its position, the thumb actuation has to happen in the opposite direction with respect to the fingers, as shown in the scheme 3.8, in order to achieve this, the tendon-like cable will pass through a pulley placed close to the finger connection, and will be fixed to the same base of the decoupling device, in order to grant the single actuation.

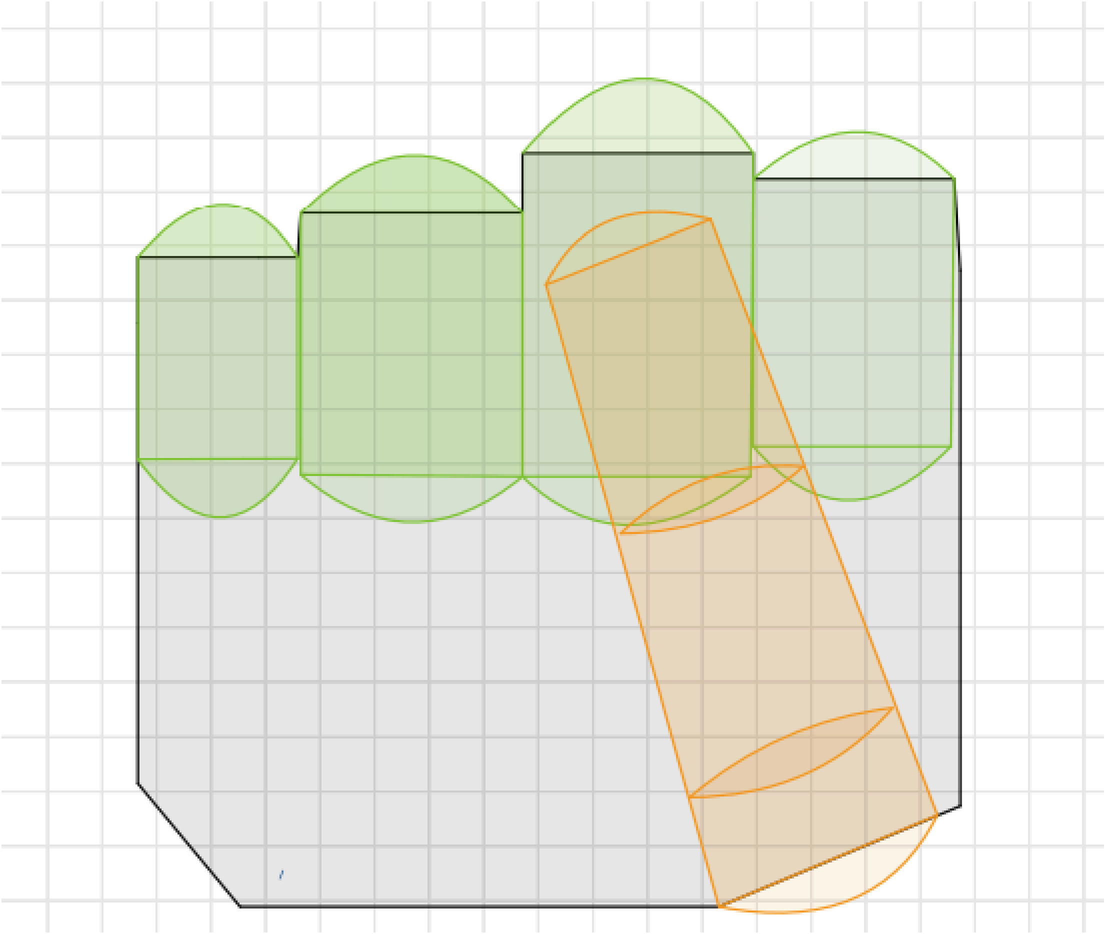

Figure 3.8, Sketch of the upper view of the thumb position relative to the fingers

After the organization of all the contact blocks in a single subsystem, allowing to simulate the interaction between all the finger phalanxes, the various fingers and the proximal phalanx with the palm of the prosthesis, the first complete simulations were executed. In order to evaluate the performance of the device, a cylindrical body was placed in the palm, then the grasp was closed, and the force studied.

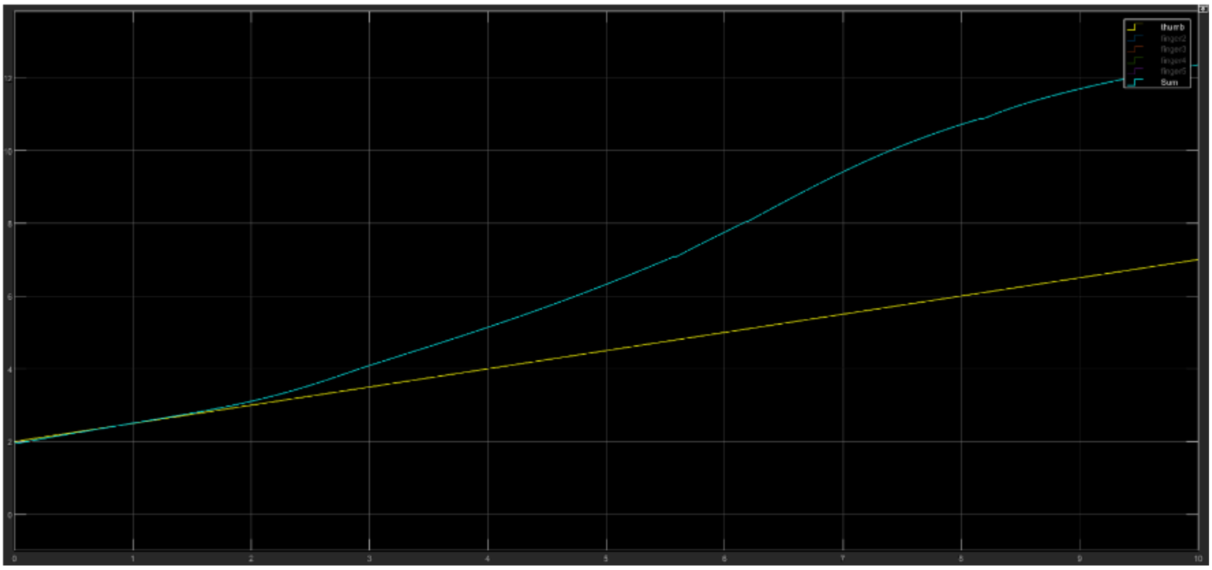

Figure 3.9, Capture of a graph of the forces felt on the thumb pulley (yellow) and the sum of the forces felt on the fingers (white)

Data in figure 3.9 shows that the fingers are stronger than the thumb, in fact, when grasping an object, this makes contact with four fingers, then the thumb, but the fingers then push the cylinder, causing the thumb to move backwards while the fingers try to grasp the object, causing it to slip away from the hand.
While this error may seem fatal, it's sufficient to implement the springs in the various joints to correct this phenomenon, as the force on each finger will be damped, with the four fingers feeling a higher combined damping than the thumb, given a total higher number of springs.

These springs were modeled in two different ways: as a mechanical system, using Simscape Mechanic's blocks, and as parts of the torsional joint of the fingers. In both cases the same parameters of stiffness, damping and equilibrium position were defined. Both the methods lead to a much higher complexity of the virtual model, causing the simulation to slow down and fail in many cases; anyways, this balances the force difference between the fingers of the hand, granting a reliable grasp of the test object, as shown in figure 3.10.

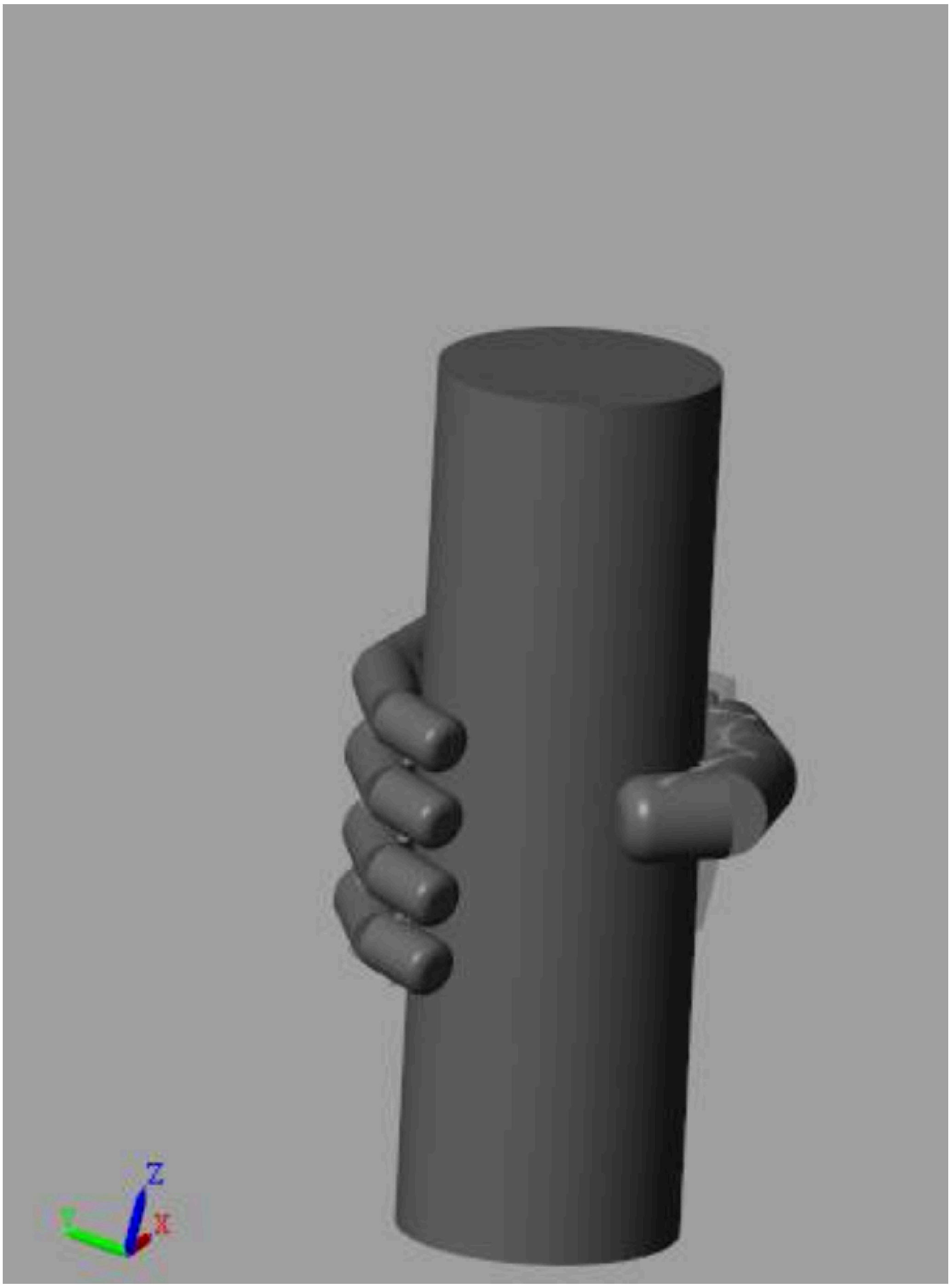

Figure 3.10, Capture from a demo video of the hand grasping the test cylinder

After some reviews with the rest of the parties involved in the project, with the majority of the work approved, the starting position of the thumb was modified to be 90º with respect to the palm, as a 180º angle would have been clearly impractical.

After various tests with this simple modification, some problems started to arise, as the single actuation made impossible the synchronization of the thumb and the fingers that, with the thumb reaching its position way before the fingers, it ends up stopping the whole actuation mechanism; a solution to this would have been to augment the differential, adding one more output pulley, that would have been connected to the thumb. This modification was tested, but the thumb still needed an inversion in the traction direction because of its orientation, implying the use of one more pulley; the space occupied by the modified decoupling mechanism and the additional pulley was not affordable for a self-contained device, already bigger than the whole palm.

Thanks to the difficulties just described, much more thinking was put into the simplification and optimization of the system, with the objective of cutting more space inside of the palm or finding a new differential mechanism.

3.2 Evolution to normally closed design

As anticipated in the last paragraph, the final design of the 3D-printed prosthetic hand was a consequence of a series of modifications of the first proposed model, all with the aim of simplifying the mechanism and improving its performance.

The first and major change made to the system came from trying to solve the space problem inside the palm, as the decoupling of the thumb could not be made because of it. Also, the mechanism would occupy almost the entirety of the palm, while the motors and the drivers, for both the actuator and the sensors, as well as a controlling device, should be placed.
While thinking about a way of reducing the dimension of the mechanism, without compromising its functioning, the idea of creating a normally closed prosthetic device was born.

A normally closed hand is a device that, at rest, is in a fist-like configuration. This choice implies that the hand will be actuated in the opening phase, while the closure is fully given by the springs; with this, there is no need to decouple each finger, as the closure is not dependent on the actuator instead, each spring, placed in the joints between the phalanxes and between the first phalanxes and the palm, will simply close the grasp until possible, stopping when an obstacle is met.
Then, it will be only necessary to decouple the thumb from the other fingers, as it still has a shorter path to follow and will stop the opening motion, that is now actuated, before the other fingers.
With this modification, the number of pulleys that compose the differential becomes 3 + 2, from the original 5+ 4 (6 + 5 when the thumb is involved), clearly cutting down the space required by a huge amount.
The argument that could be done is that all the grasping force would be given by the springs, not by a motor but, the elastic elements could be chosen to obtain a maximum torque just slightly lower than the one provided by the motor, or even higher, at the cost of reducing the opening range of the hand.

According to the experts at Ayúdame3D and some patients who were consulted, this prosthesis design should not represent any kind of problem, as the fist position is common in everyday life.

With this approval the project evolved and, in a few days, a new prototypical model was ready for the simulation; the model, shown in figure 3.11, aims to verify the feasibility of the idea and, initially neither the pulleys nor the main body of the differential mechanism was changed. In the virtual reconstruction of the prototype it is possible to see a simple schematic where the fixed core of the differential mechanism is dark gray, the closed loop cable is yellow, while cables actuating the fingers and the thumb are, respectively, in purple and green; in blue it’s represented the so called drive bar, an element meant to connect the four tendons of the fingers to a single body, allowing for an easy connection with the differential. On the thumb side, instead, there is no variation of the mechanism as there is a pulley, simulated by the dark gray sphere, to which the thumb tendon is fixed, passing by another pulleys that allows the inversion of the actuation direction.

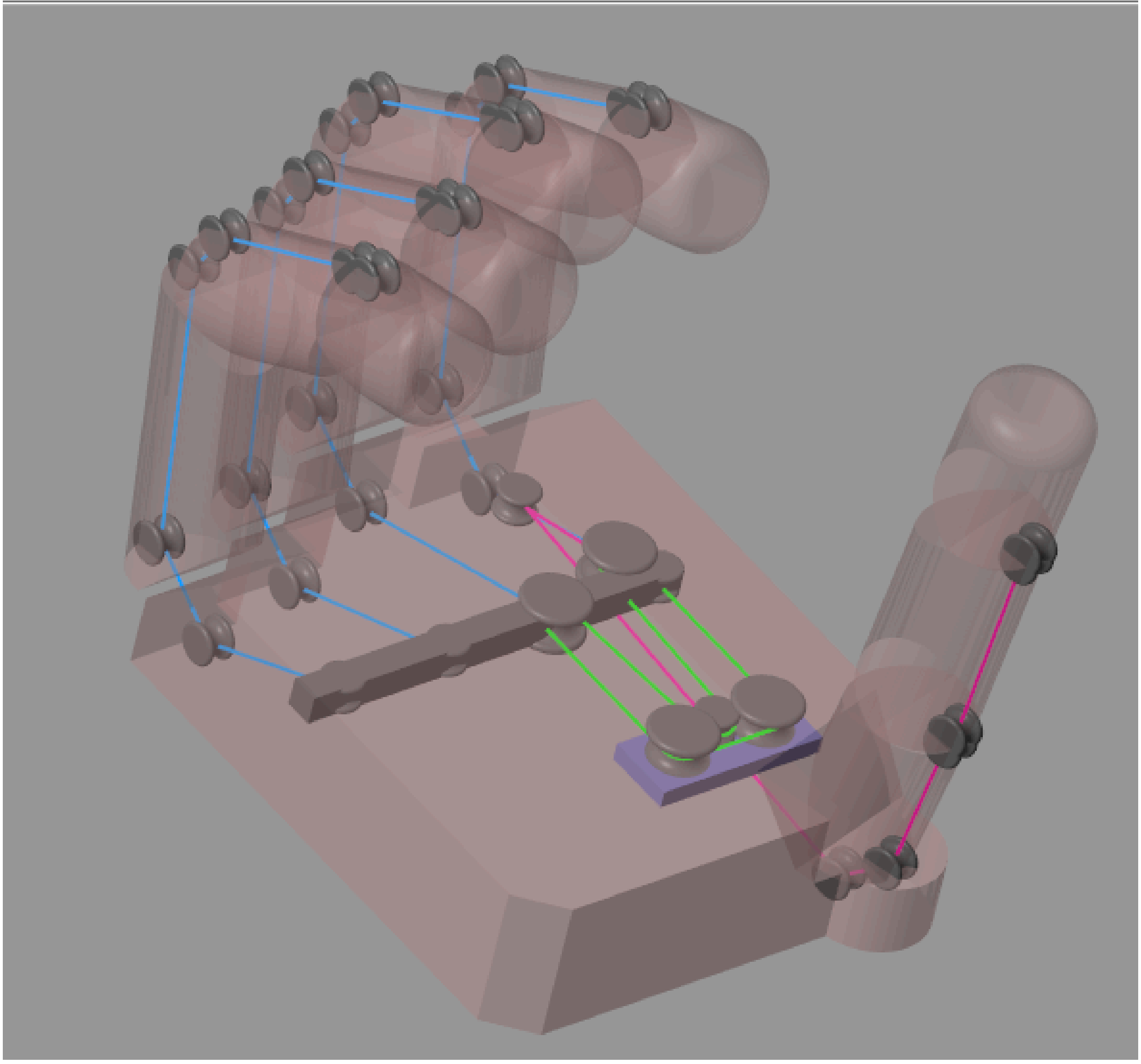

Figure 3.11, Capture of the virtual model of the new normally closed hand

Another important modification regards the fingers which are, in fact, simpler than the first version; after some studies it was clear that there was no need for complex cable paths, instead, a simple hole through the phalanxes would do the job.

To better explain the functioning mechanism, a detailed simulation has been implemented, a capture of the resulting virtual environment is provided in figure 3.12

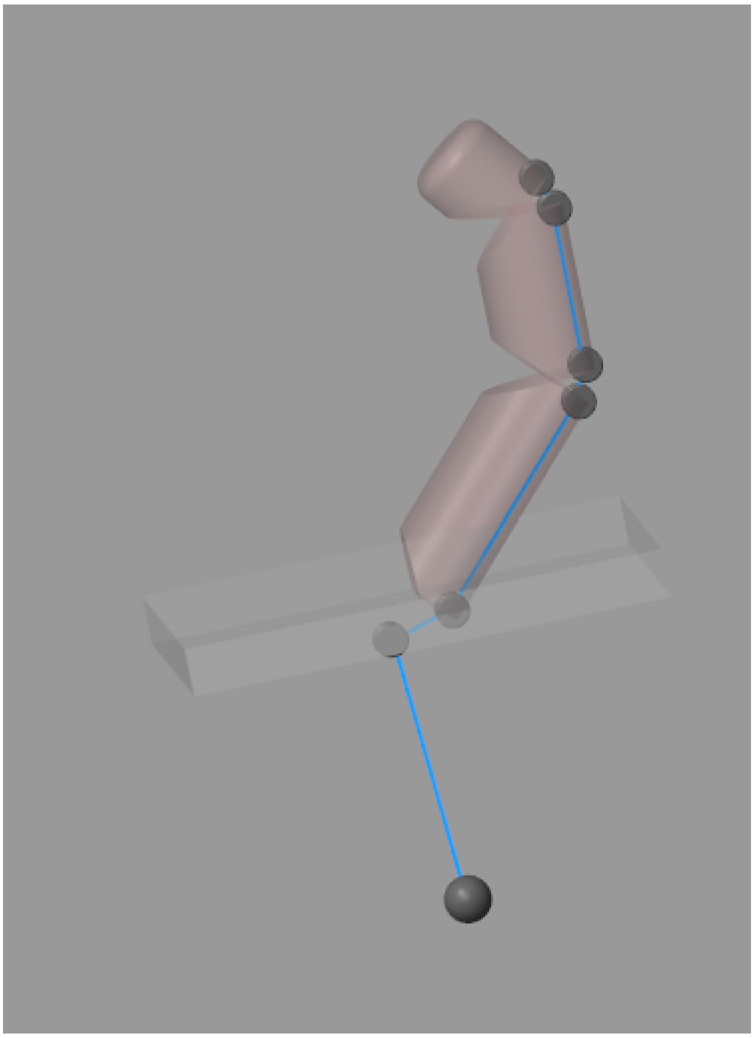

Figure 3.12, Capture of the virtual model of a single finger

The force applied to the finger tendon is constant but, due to the presence of the springs between the phalanxes, its effect, felt in the various joints, is nonlinear and it's exactly this nonlinearity that allows the phalanxes to open in order, from the distal to the proximal, as happens in a normal human hand. When the cable-tendon gets in tension, all its force is transmitted to the distal phalanx where it's transformed in a momentum that opens the joint. While the angle of the joint gets larger, also the energy of the spring countering the movement rises; this allows the introduction of a certain time delay between the motion of each phalanx, whose existence was proven in the simulation. Data are shown in figure 3.13, while in 3.14 it's possible to appreciate the same effect on the distributed momentum felt at the joints.

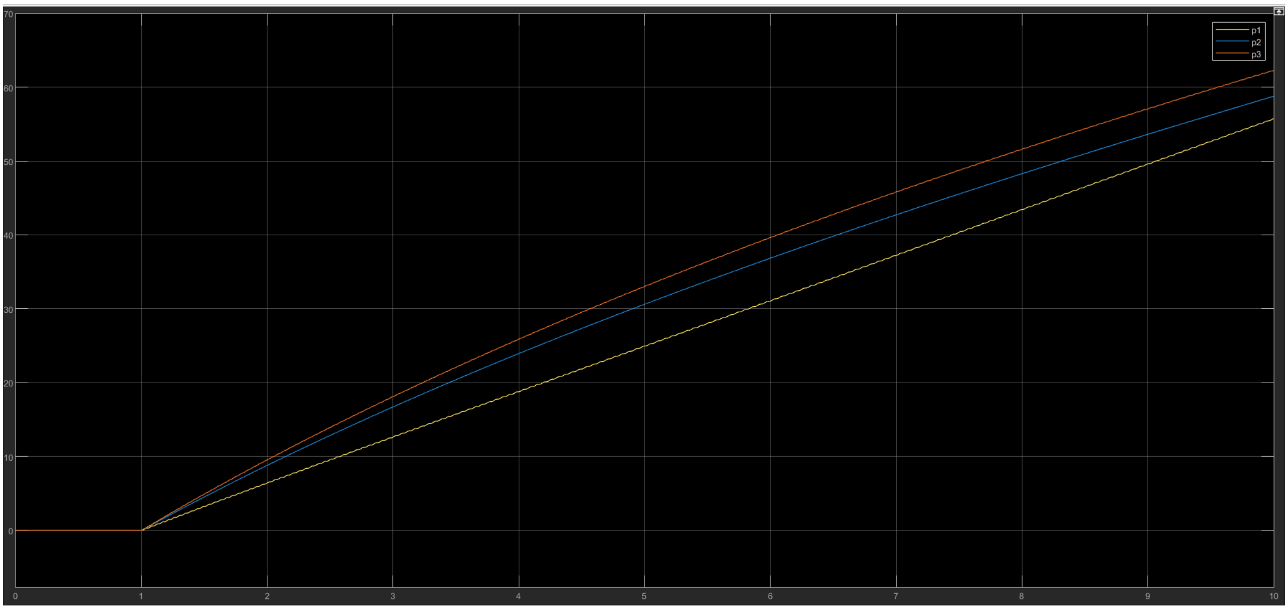

Figure 3.13, Graph of the angle between the phalanxes, expressed in degrees, proximal joint (yellow), medial joint (blue), distal joint (red)

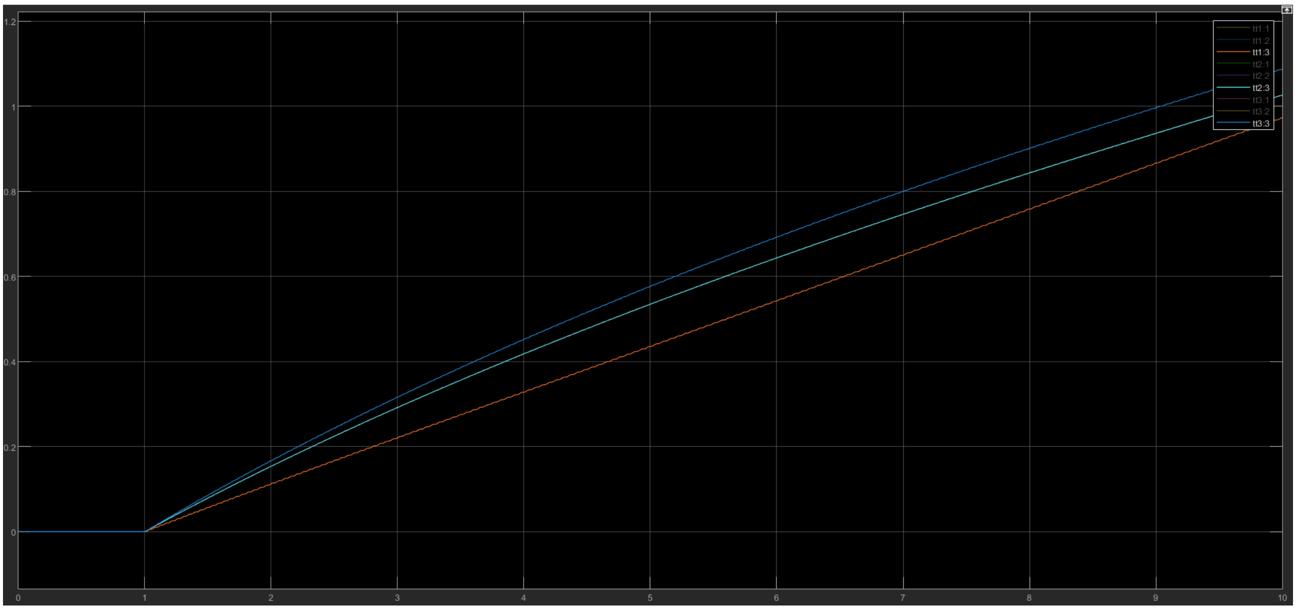

Figure 3.14, Capture of the trend of the torque felt at the proximal (red), medial (white) and distal (purple) joints

After implementing such modeled fingers, with an identical design for the thumb, the complete simulation can again be constructed, with the result shown in figure 3.11. From it, it has been possible to perform again the studies about the required range of motion of the mechanism, and to balance the springs with the motor, finally proving that the virtual model is capable of grasping a simple cylinder with the weight of a water bottle.

4 Physical Prototypes

4.1 Second prototype realization

The project consisted also in the realization of a physical prototype, made using 3D printing technology as well as easily accessible components.
The 3D printers used for the fabrication of the designed parts were BambuLab P1Ss, some of the best commercially available FDM printers. A picture of those is shown in figure 4.1, taken from the official catalog of the company, featuring its closed chamber and the AMS, allowing for multicolor and multi material prints. These printers use the FDM technique for building a part, consisting of the deposition of fused material, obtained by heating a thermoplastic coil, that can be seen inside the AMS.
For the prototype of this prosthesis PLA was used, which is the most commonly used material for FDM printers and has discrete mechanical properties; the idea is to later produce some parts of the prosthesis in TPU, another common polymeric material with higher elasticity whose mechanical properties can be tuned by changing the thickness of the printed walls, this could even substitute the springs inside the fingers, making them print-and place, but also allows for a better grip for those parts of the hand making contact with an object.

Figure 4.1, P1S 3D printer with AMS, from the official BambuLab catalog

For the design of the components Inventor was selected, which is a CAD software related to Fusion360, produced by Autodesk; this software was chosen after the discovery that some companies use it over SolidWorks or CATIA, and a free student license was available. While not being such an impactful decision for the specific project, gaining experience with a different CAD software was a favorable point.
Between designing and printing a component it is necessary to slice it, meaning transforming the geometry into commands for the printer, and this was easily done using BambuStudio, the official slicer for BambuLab 3D printers; such software requires, as input, the piece to be printed, and allows to set the printer parameters, such as infill density, wall thickness, support type and many more, whose detail is out of the context of this thesis.

With everything set up, it is now possible to discuss the practical implementation of the prototype, starting with the design of the components. All started with a reference block, shown in figure 4.1, representing the set dimension of the hand, with 45º rafts for fingers and thumb, so that they will not exceed the 90º of angle with the palm when closed.
From this block, two main components will be created, the base, referred as “palm”, and its cover, referred as “palm top”; these will represent the fixed element, connected with the rest of the prosthesis or the stump, and the rest of the components will have a relative motion with respect to them.

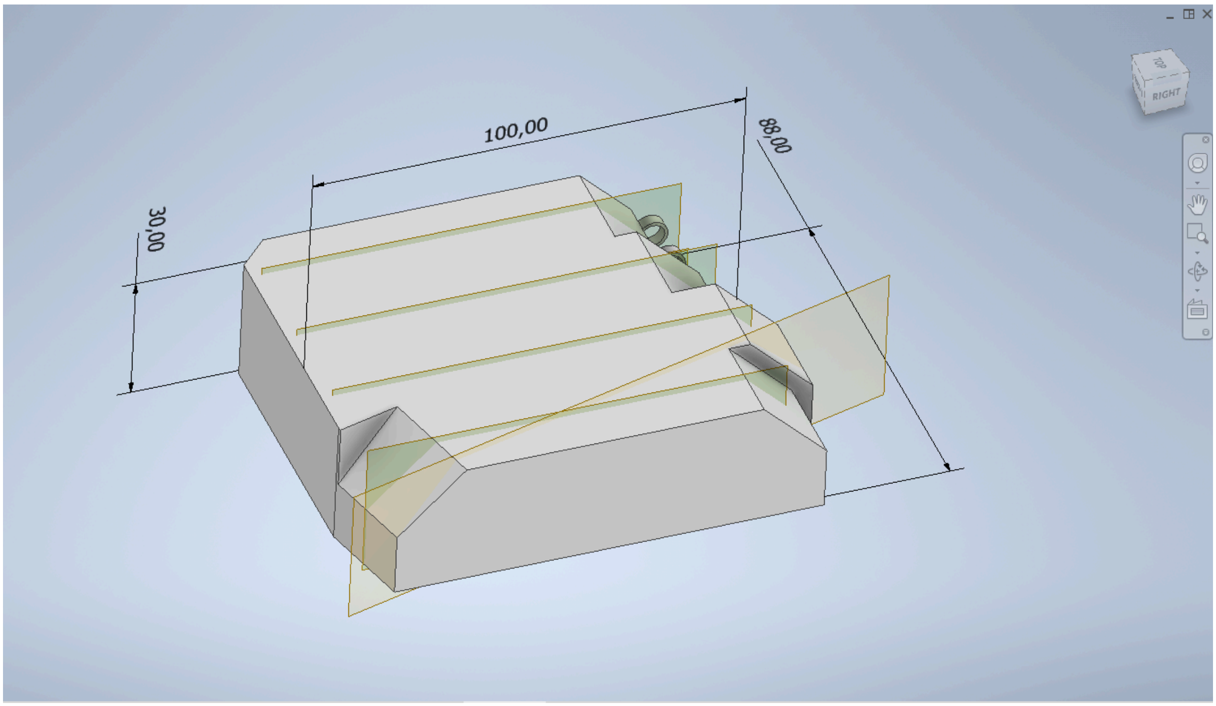

Figure 4.1, Capture of the main reference block for the hand construction

The first prototype was actuated by a DC motor N20, with reduction box 75:1, shown in picture 4.2; this motor has a theoretical stall torque of 1.6 kg/cm, with a wood speed of 400 rpm, it was chosen for its good mechanical performances and its reduced dimensions of only 26 x 10 x 12 mm, making it perfect for the application.
Fingers were equipped with metal torsional springs, reported in figure 4.3

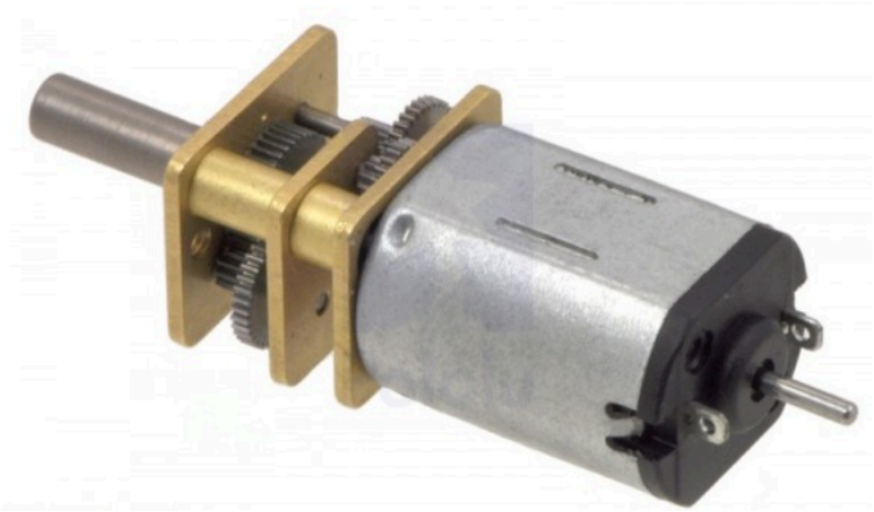

Figure 4.2, Image of the DC motor N20 used in the first prototype

Figure 4.3, Photo of the torsion spring to be inserted between the phalanxes

These springs represented the first real obstacle of the practical built of the prosthesis, as it is very difficult to purchase torsion springs with a given spring ratio, or known parameters without direct contact with a producer; on the other hand, producers will charge high price per unit for reduced batch of products, making it hard to find the right springs, and way harder to make them affordable.

Inside the hand was also contained the driver, necessary for controlling the motor; for the application the common most compact drivers were not suitable, as they would not whitestand the 1.6 A of current that the motor could require. Because of this the L298N was selected, showed in figure 4.4, while its functionalities are common, this is the smallest, commercially available driver able to endure up to 2.0 A, it presents also a protection circuit that avoid back-currents from the motor to the system and an heath-dissipation surface.

The control of the whole system is entrusted to a cheap Arduino Nano board, a breadboard-based microcontroller with both analog and digital channels, that is programmable through ArduinoIDE; this particular controller was chosen for its reduced dimensions and its availability all around the world at very low cost.

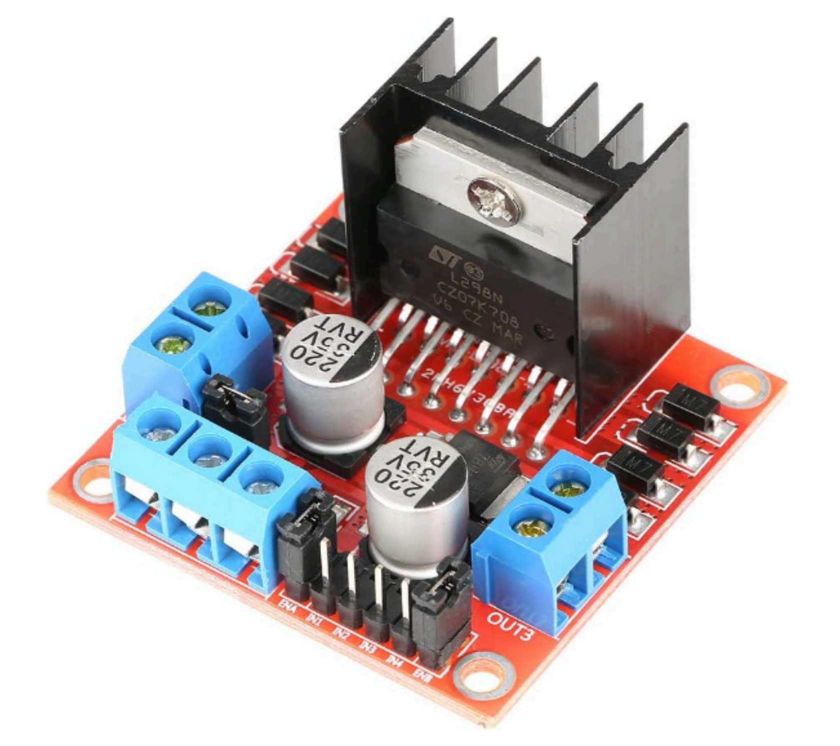

Figure 4.4, L298N driver, used in the prototype

After various partial iterations, needed to calibrate the tolerances of the printed parts, a first, complete set of palm and top was designed, with the first presented in figure 4.5, where it's possible to appreciate the complexity of the part that, as stated before, was already simplified from the original design.

The alimentation of the electronics was given by two small 3.7 V LiPo batteries, shown in figure 4.6, in series, as this represented the optimal compromise between voltage and space, as both the microcontroller board and the motor have a nominal voltage of 6V. Both batteries came with an already implemented protection circuit but it was necessary to sold them in series and connect them to a 3-port Molex male connector, by linking the positive side of the first battery to the leftmost pin, the negative of the second battery to the rightmost pin, and the soldered series connection between them to the middle pin. This setup allowed the batteries to connect to the rest of the electronics inside the hand, using only the first and last pin, or to the charger port, mounting a compatible connector, allowing to easily switch between charging and operative mode. With these batteries about 12 hours of activity were calculated for the microcontroller and the driver, and with the motor also connected to them about 8 hours should still be achieved.

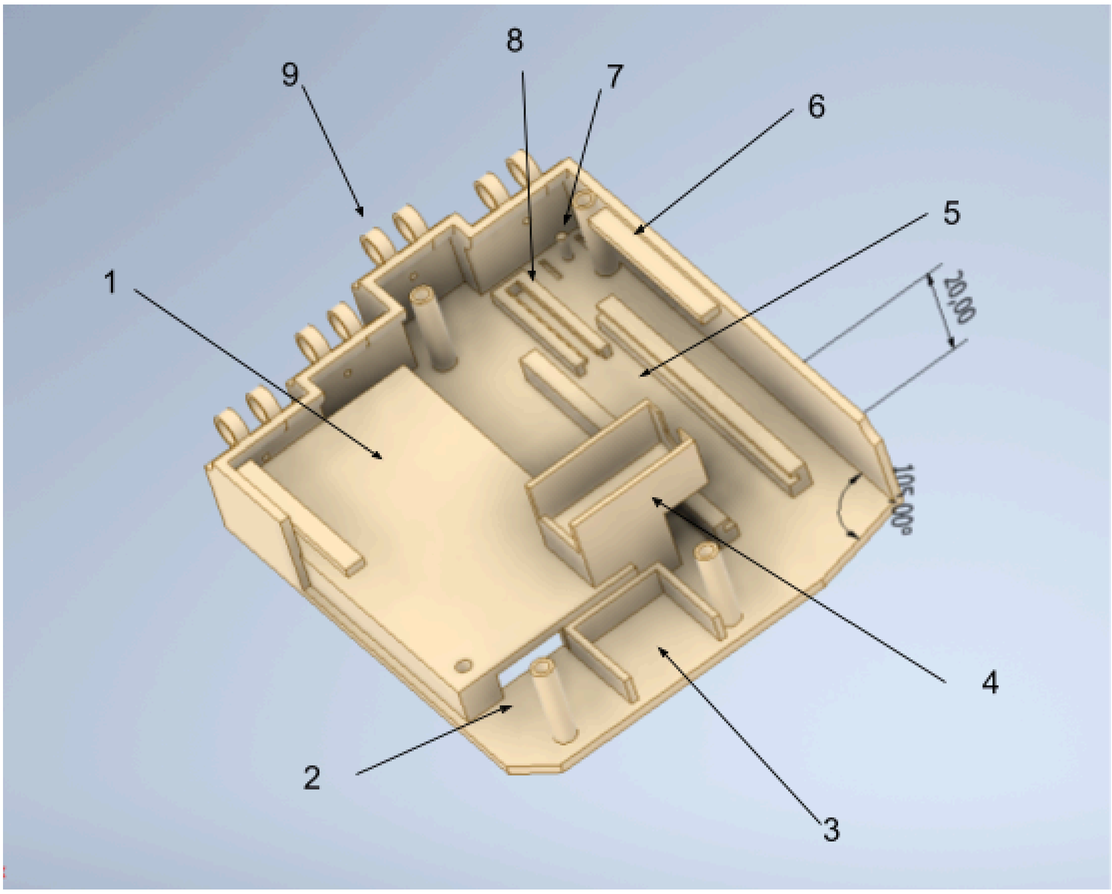

Figure 4.5, First compete iteration of the palm component

Figure 4.6, Image of one of the batteries used for the prototype

The model includes features for holding all the external components needed for the functioning of the prosthesis as well as the mechanical parts to be mounted inside of it. The various feature in figure 4.5 are described in the following:

1. the case for the batteries, open on the back of the hand, it can be closed with an external plate, the opening in it allows to fix there the female Molex that connects the power source to the internal electronics;
2. highlights one of the 4 pillars that hold the screws fixing the top to the base palm, a fifth is present, extruding from the cover, the hole for the screw is visible on top of the battery case;

3. the holder for the driver that can be fitted between the walls and fixed there by interference, an extrusion from the cover helps keeping a firm position, while still allowing all the cables to be connected without obstruction;
4. the case for the motor, having an opening on the front for the shaft and one on the back for the cables, its structure was designed with an almost zero gap between the walls and the motor, as well as the maximum amount of material possible, this was meant to reduce the vibrations of the actuator;
5. rails for the main body of the differential mechanism, as the floating effect theorized was not achievable in reality, this solution allowed to maintain a minimal friction as the C- shaped tracks gripped the protrusions of the mechanism, avoiding movements in any direction but the one wanted, so that the hand could function in any orientation.

   This particular design implies the need to mount the differential by sliding it inside the rails from behind, because of this the back wall of the palm base was removed and attached to the cover;
6. the lower part of the rail for the finger driver bar, showed in dark gray in figure 3.11, it was coupled with an upper portion in the palm top, specular on the other side of the hand, these guided the drive bar allowing only motion in the actuation direction;
7. pin for the pulley that allows the inversion of the tension direction of the thumb's tendon, on its side two long cuts allow to fix, by interference, a cover that keeps the pulley from escaping the pin;
8. rails for the thumb pulley connected to the differential mechanism, holds the pulley that transmits the tension to the tendon;
9. rings that allow to fix the fingers, with an appropriately designed pin, as well as the springs, for whom the holes just below are placed.

The other important assembly is the finger, equal for each one, with the thumb being slightly shorter; each phalanx is composed of two pieces distinguishable, in figure 4.6 in double color, held together by means of two screws. This design was chosen so that it was possible to assemble each joint, slotting one branch of the torsion spring in figure 4.3, between the two pieces, then closing them, the branch was held in a dedicated area of the parts, opportunely shaped to avoid any movement. The back portion of each phalanx, in blue, has also two or four rings, these are coupled with the rings of the subsequent element of the finger, or the palm, being slightly shifted, and are aligned coaxially and connected by a pin, shown in gray, and highlighted in figure 4.7.

The torsion spring held between the two parts of the phalanxes were placed coaxially to the joint's ring, with the pin inserted in them.

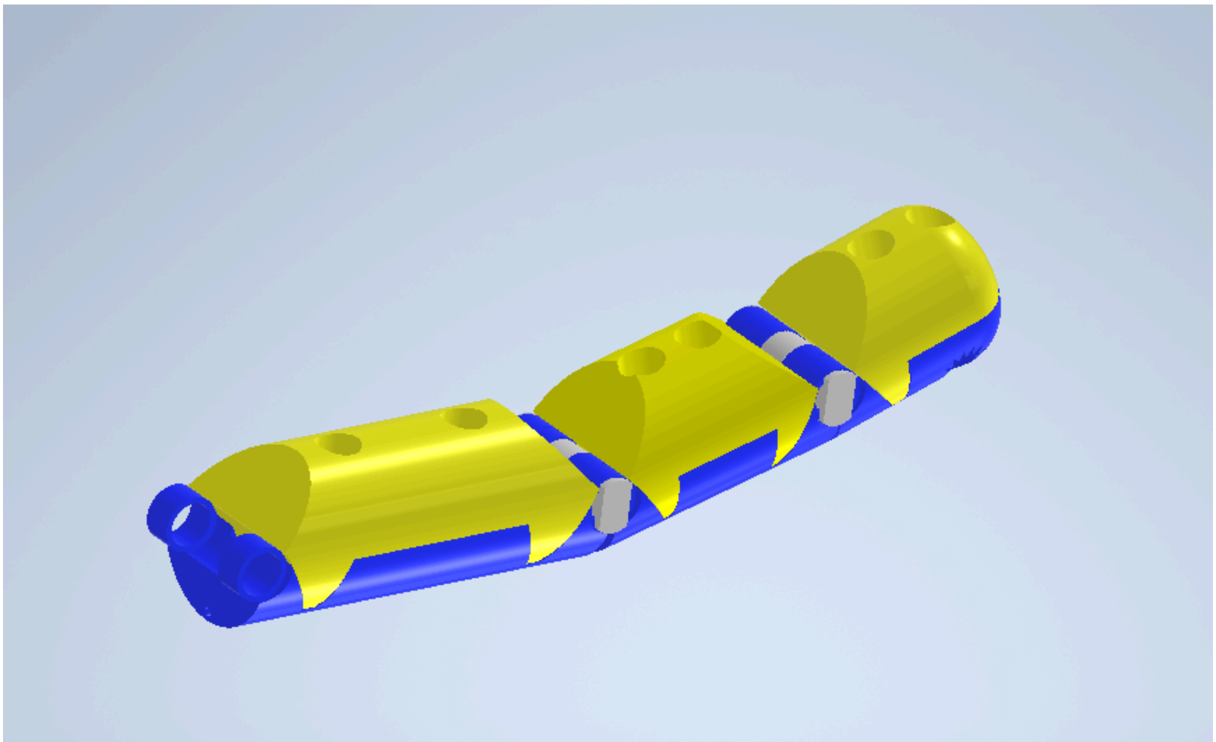

Figure 4.6, Capture of a finger assembly, in blu the back of the phalanxes, in yellow the palm oriented portion, in gray the pin that hold them together

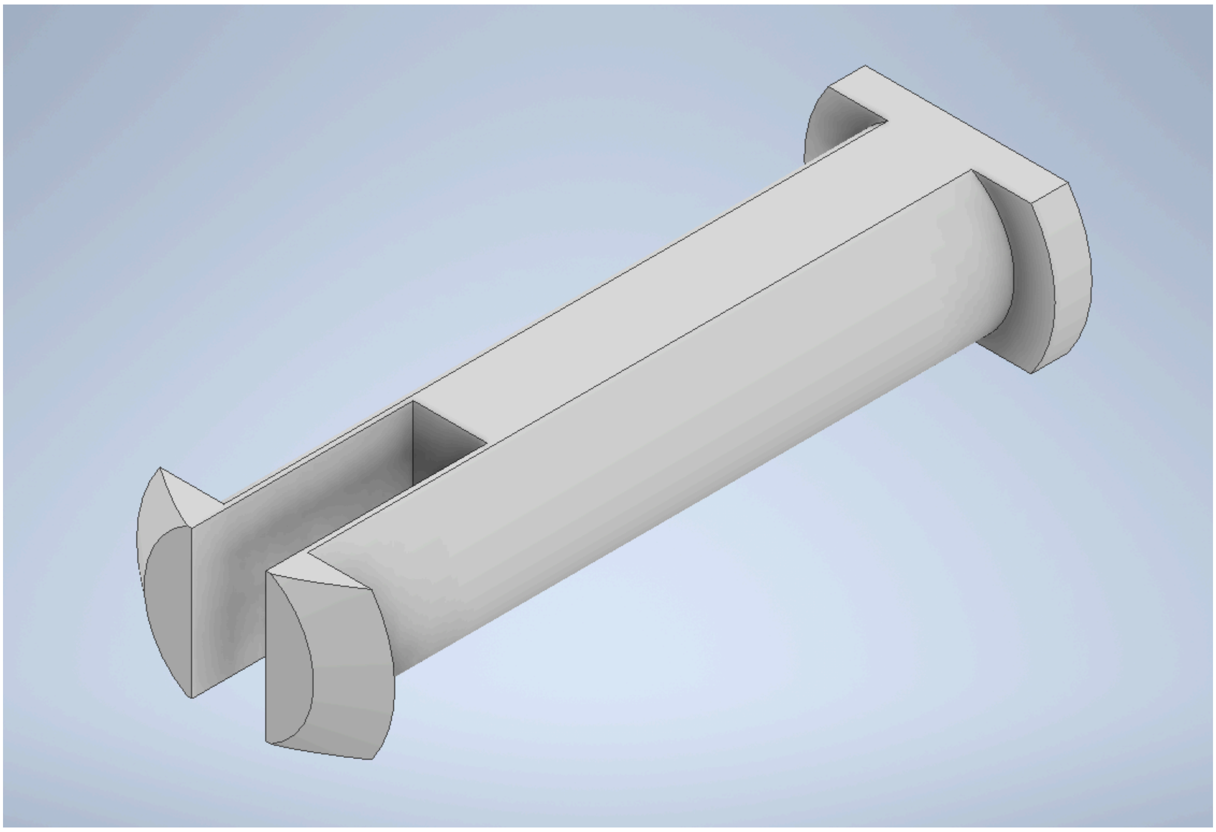

Figure 4.7, Capture of the pin used to connect the phalanxes

This pin allowed the connection to function as a revolute joint, multiple trials were needed to find the right dimensions and post-processes that allowed a very low friction, enough to let the finger freely move under the effect of gravity. The pin was realized in PLA and used its elastic property to connect the pieces, its branches could be slightly compressed in the final portion when being inserted, because phalanxes's rings were slightly smaller than the end of the pin that shaped, so that the compression was helped during the insertion; when fully inserted, the tip of the pin would reach outside the opposite ring, on the other side of the phalanx, and decompress, granting a firm grasp of the two components.
Again, multiple trials were performed to find the right quotes for this component, as the length of the middle cut and its width had a major influence over the elastic properties and resistance of the pin.

The other component designed was the main body of the differential mechanism, reported in figure 4.8. The original design of figure 3.11 was made slimmer and attached to a longer rack element, the differential body presents three pins for the needed pulleys, the signs between them are cut in the material that allowed to fit a cover for the pulleys, fixed by interference, that would avoid the pulleys to get out of their position.
The rack part of the element is built in pair with the pinion, a wheel gear of nominal diameter *d=18 mm* and module *m=1.5*; the whole component is placed over a couple of tabs that will be inserted into tracks (5) of image 4.5, this was designed to minimize the contact area between moving pieces. The pinion cited is shown in figure 4.9, it is built on a circular base that's coupled with the motor shaft connector by four small screws, its dimensions were maximazide to guarantee maximum force while fitting inside the palm.

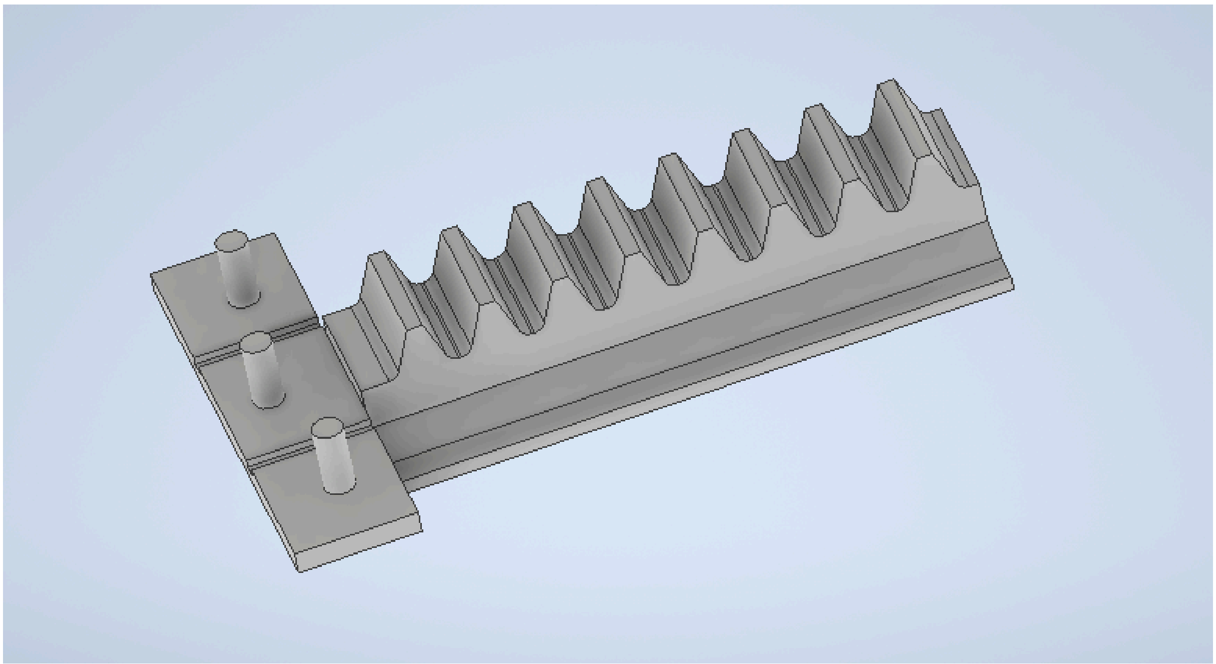

Figure 4.8, Capture of the main body of the differential mechanism with the rack

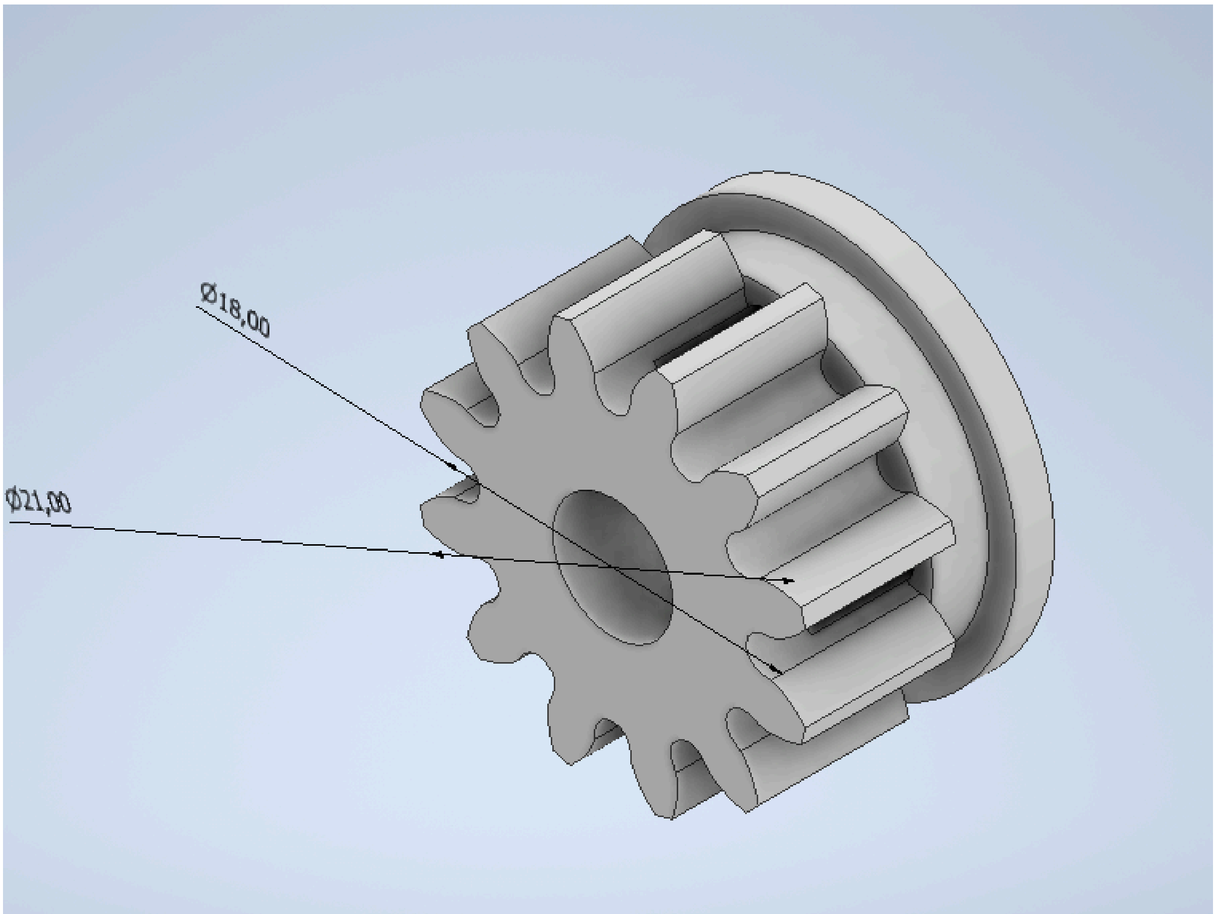

Figure 4.9, Capture of the pinion coupling the motor and the rack

The finger drive is composed of two parts, an upper portion and a lower portion, joined by two screws, reported in figure 4.10, this division was meant to allow the insertion of a pulley between them, where the pin is present, and keep it fixed to the bar. This pulley completes the closed loop cable mechanism, along with the thumb pulley; the rack and the drive bar that present two tabs as well, in the lower part. The thumb pulley pern is coupled to the relative pulley by means of a similar design to the one used in the pin between the phalanxes and has two tabs for its rails identified as feature (8) in figure 4.5, that constrains its degrees of freedom to translation along the actuation direction only.

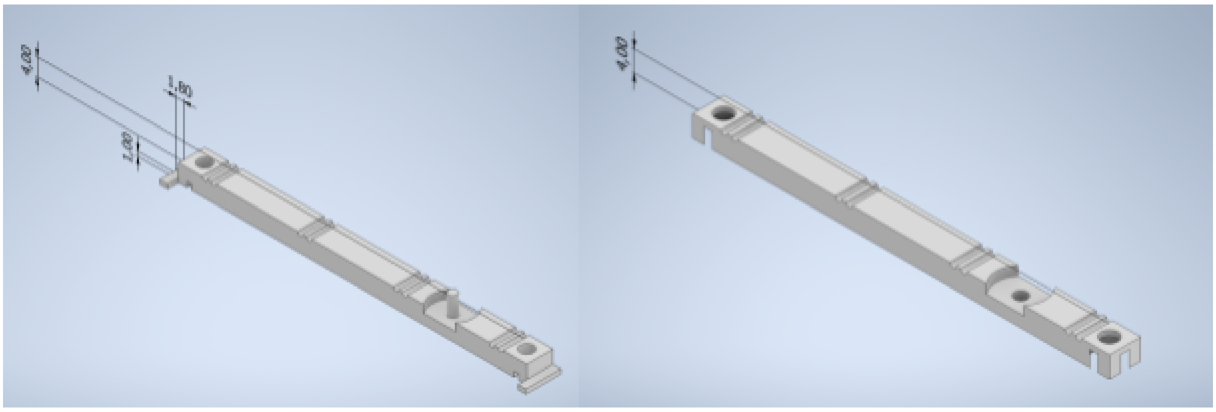

Figure 4.10, Captures of the upper and lower portion of the finger drive bar

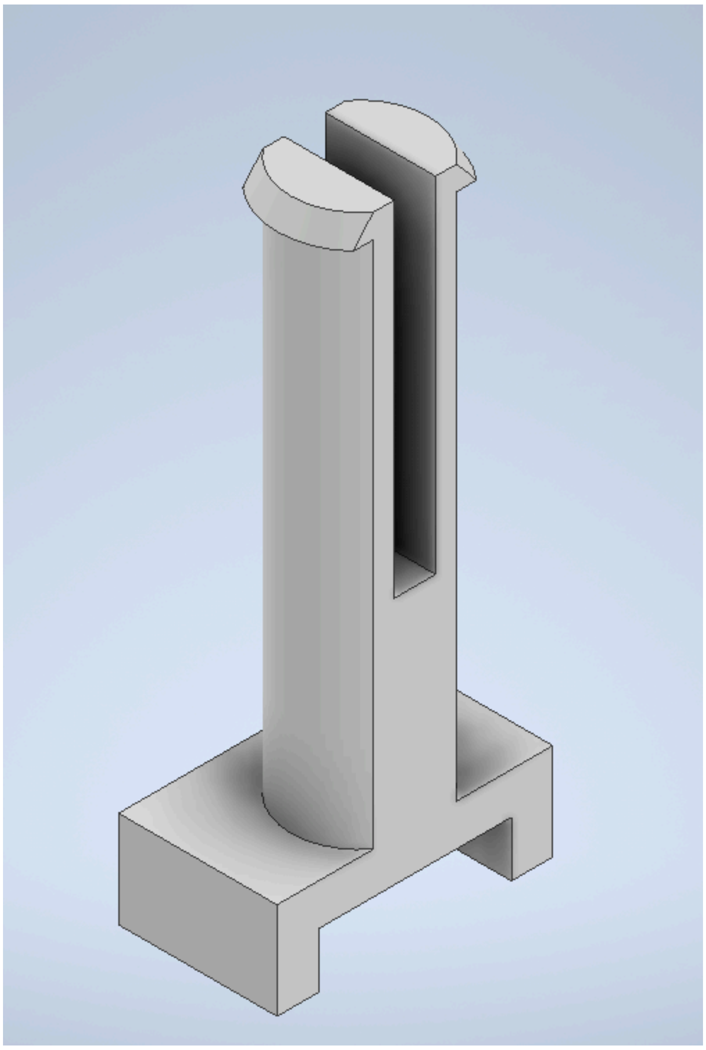

Figure 4.11, Capture of the thumb pulley pin

With all the set up done, the electronic components still had to be implemented, namely the myoelectric sensor plate used for the control of the prosthesis, and the Arduino Nano; both of them had no fitting in the palm base that was opportunely modified as in figure 4.12, where (1) indicates the footprint for the microcontroller, with an opening shaped to fit an USB-mini port, that would allow to access the firmware of the Arduino board, without opening the device; (2) holds the myoelectric sensor board, in figure 4.13, this board had a jack port to connect the electrode to, this was placed to face the outer side of the prosthesis, in order to plug the sensors in the most comfortable way possible.

The myoelectric sensor used is a simple AD8232, made for amatorial projects, it comes with three sensors, made with a conductive nail and a sponge circle, they must be placed in different points of the same muscle and will return a single analog signal through its printed circuit board (PBC).

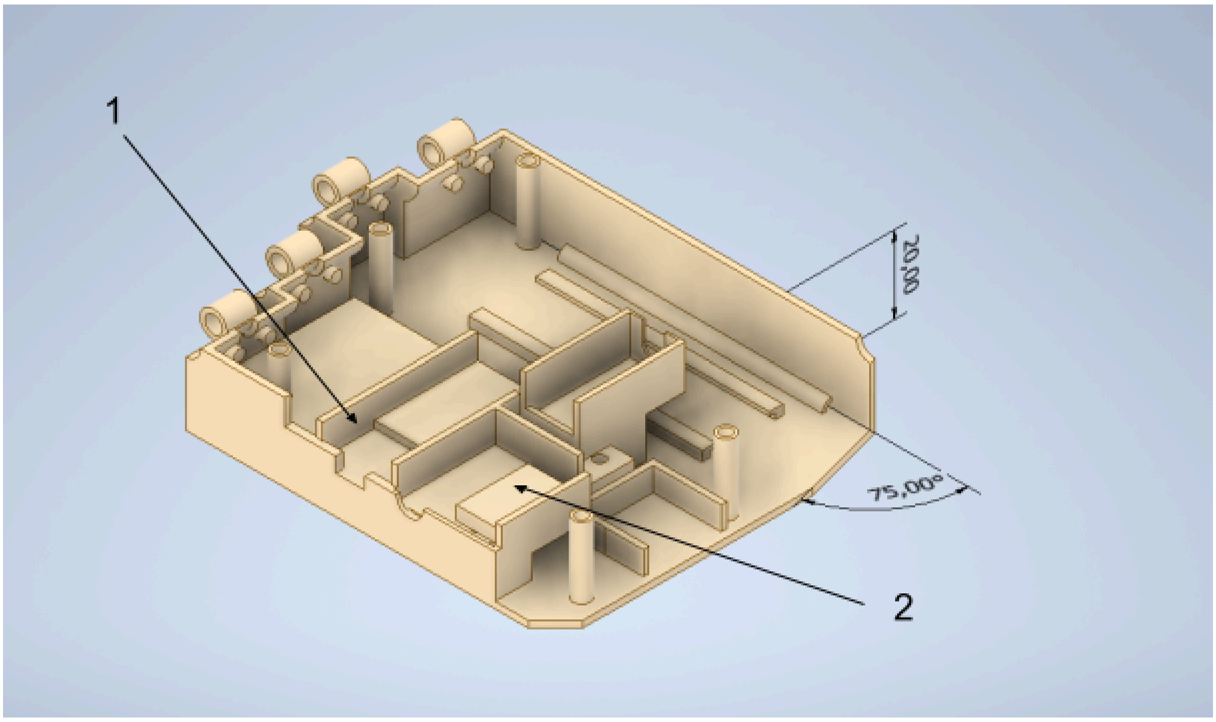

Figure 4.12, Capture of the final palm base of the first prototype

Figure 4.13, Image of the myoelectric sensor AD8232

4.2 Third prototype realization

After connecting and testing the first complete prototype some issues became evident, the main one was the motor failing to open the fingers from an angle different from zero, this was due to the higher spring ratio of the elastic elements that, coiled with the friction caused an higher power than the one expected to be needed, even with the 1.5 safety coefficient applied on the simulation results.

Another big issue was that, whenever the hand was not in perfect plain position, like resting on a table, the finger drive bar would slightly rotate and gets stuck in the rails, causing the motor to stall, without any motion provided, furthermore, when this situation occur, the springs are not able to unlock the mechanism so it’s necessary to manually open the prosthesis and move the piece back in place.

The last issue was about the springs branches whose rest angle resulted changed by few degrees after a few openings and closures, providing less torque; after one night left assembled in the hand, the

deformation was even more relevant, making the springs almost unusable.
To summarize, metal torsion springs are expensive if bought in small stocks, it’s hard to find the right size and to obtain data about their mechanical properties, more, cheaper product have very low quality and their performances cannot be guaranteed over time; in order to solve these issues, the parties involved in the project agreed to switch to small rubber bands, these came in various sizes and their elastical properties, while still being difficult to measure, can be easily tuned by switching between the various sizes or mounting multiple of them where needed. A photo of the bands in question is shown in figure 4.14.

Figure 4.14, Example of rubber band used for the prosthesis

These rubber bands are weak and easy to break but, on their side, their cost per unit is minimal and by using them it’s possible to test with various sizes, tuning the desired grasping force with the maximum torque provided by the motor.

To accommodate this solution, fingers design was slightly modified, accommodating the new elastic elements, letting space for placing multiple of them and, with this, also the joint rings were enforced, as easily susceptible to breaks. Since the space before occupied by the springs could now be filled with more material, the resulting assembly is shown in figure 4.15, with a section view.

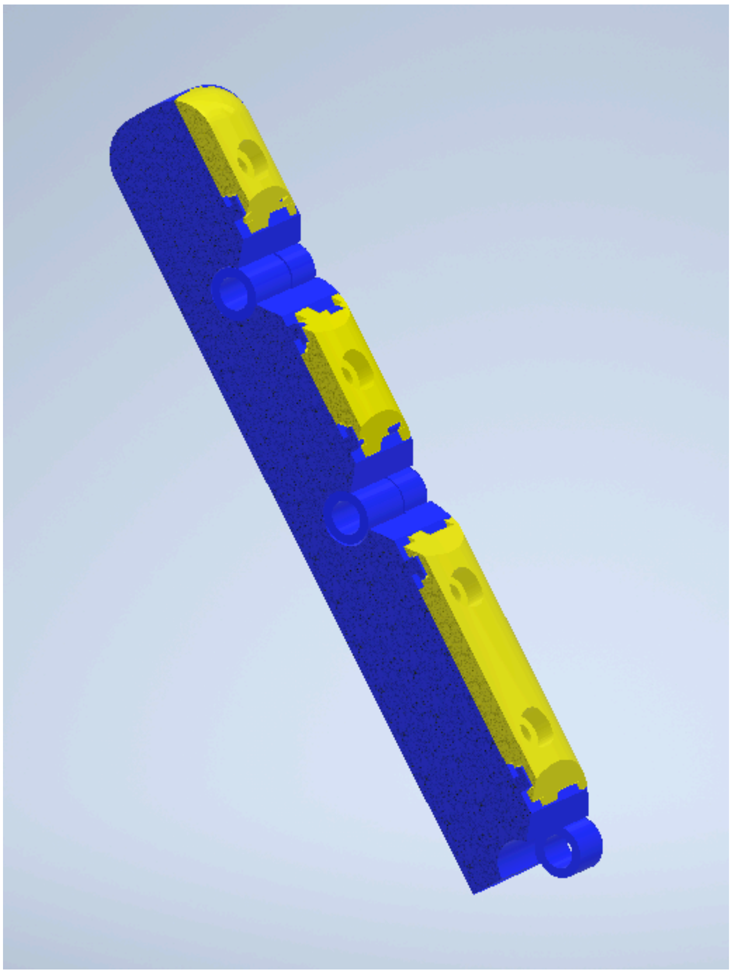

Figure 4.15, Capture of the the updated finger assembly

More modifications were done to the model, the two part phalanxes were modified to have a main body, in blue in figure 4.15, that’s thicker and contains the coupling rings as well as some pins, visible in the section, to which the elastic bands previously described are attached; these pins are covered by the thin yellow part whose main function is to prevent the elastic elements to get out of position; a side note is that, if the producer wants to obtain a better grip without printing everything in TPU, it will be possible to print only these parts of the phalanxes with that material as the contact points with the objects will be distributed on these elements.

These modification were reported also to the palm, with pins for connecting the elastic bands between palm and proximal phalanxes, as it’s possible to see in figure 4.16, as well as a major modification: there are no more tracks for the finger drive bar, nor for the thumb pulley. In fact, the major change of this second version of the prosthesis is the different differential mechanism, as the one originally chosen for the theoretical null friction was affected by very high friction; the second best mechanism was tested, with better success.

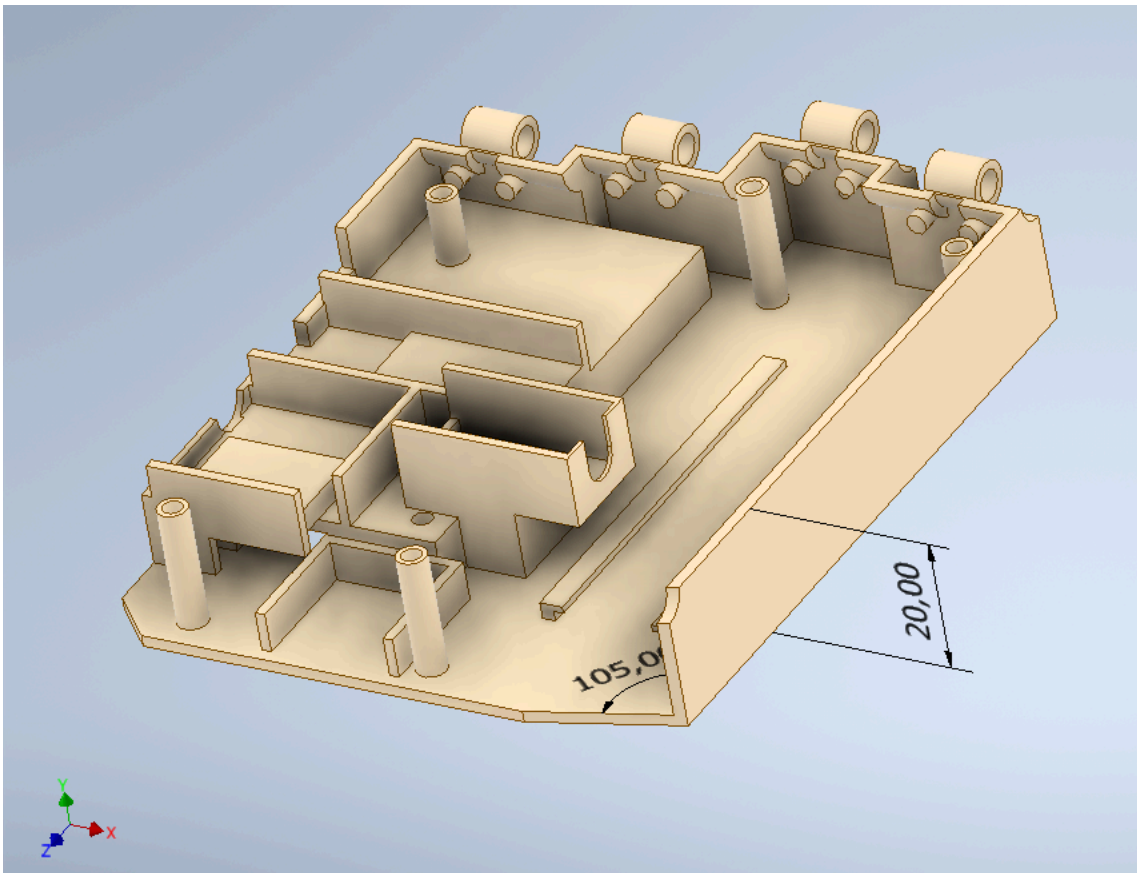

Figure 4.16, Capture of the second prototype palm base

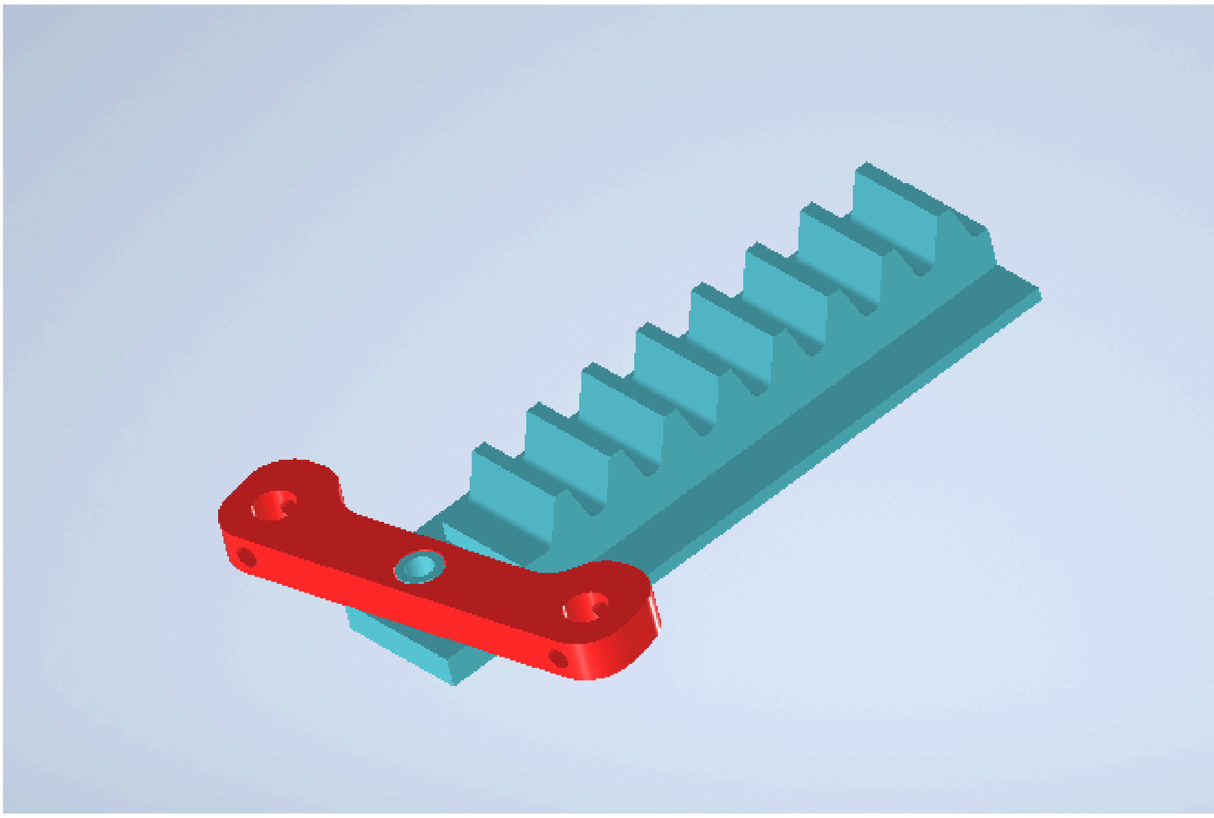

Figure 4.17, Capture of the the second prototype differential mechanism assembly

In figure 4.17 the new differential mechanism assembly is reported, while the rack portion remains the same, the triple pulley host is substituted by a single pin to which a rotating bar is fixed by means of a screw. This new configuration is a simplified version of the mechanism presented in figure 2.3, proposed by Lalibertè et al., (2010) and it uses the lever effect of a rotating bar to decouple the motion of the thumb and the fingers, tendon-like cables pass through the small holes in front of the bar, exiting from behind, while screws can be fixed to the vertical holes to impede the tendons to exit; these cables will then exit the palm from holes under the finger's joints.
An analogue locking mechanism for the cables is designed in the distal phalanx of the fingers, where a small screw can be placed, and this allows to connect the tendon to the differential and close the hand, then the fingers can be placed and the length of the cable adjusted by the outside.

The only pulley remaining in the system is the one that converts the actuation direction of the thumb, this limits the number of elements with non negligible friction to only 2: the rack moving in the rails and the bar rotating over it.

With this configuration the prosthetic hand is fully functional and complete, a major advantage is the ease of maintenance, as the most exposed elements are the fingers that can easily be substituted without opening the main assembly by unplugging the pin in the joints and the elastic bands that, being susceptible to frequent breakings, can be easily substituted. The main difficulty to bring the device online stands in the correct tuning of the cable length that must be tense, when the hand is closed, without breaking.

With the first prototype accomplished new requests were submitted, in particular, it resulted that the motor used was difficult to buy aboard, furthermore more strength and easier to obtain batteries were required. In order to fully accommodate the needs of the final producers, a new series of motors was included in the project, as they were stocked in the laboratory warehouse. The motors in question were DS3225MG, in figure 4.18, these are servo motors with high torque for simple amatorial application, in particular the majority of the models available had a maximum torque of 25 kg/cm, other than having to deal with the higher encumbrance, it being a servo device instead of a common dc motor also caused the need for slight modifications, as the range of motion of these actuators is usually bounded between 0º and 180º, as in the case of the DS3225MG.

Figure 4.18, Servo motor DS3225MG

Using the same rack pinion mechanism as with the N20 motor resulted in a shorter motion of the differential mechanism, because of this, it has been necessary to modify the radius of the pinion, increasing the mm/º proportion, the space of the palm didn't allowed such modification and, because of this, the compromise of adding 5 mm to the total width of the palm had to be accepted.
Other modifications to the prototype consisted in the change of position of the control boards, as shown in figure 4.19.

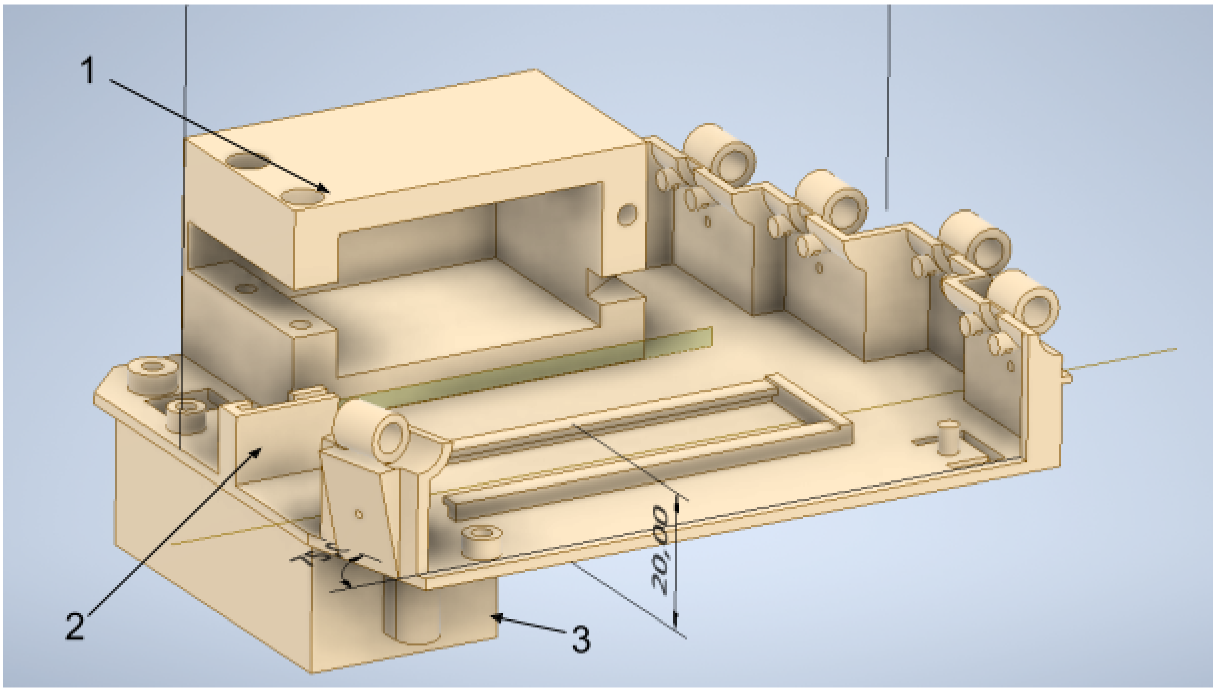

Figure 4.19*, Capture of the third version of the palm*

The new palm features a new motor case (1), made bulkier to reduce the vibrations; the EMG sensor's board has been placed close to the motor (2) with the jack exit facing towards the back of the hand; unfortunately the requested battery do not fit inside the hand, as the group decided to feed the system with a common 9V battery, because the voltage needed by the new servo was higher. These are largely available and cheap while rarely being rechargeable, because of the new component to be used, a new battery case (3) was designed and placed on the back of the hand, close to the wrist, as the whole prosthesis should be perceived as lighter if the center of gravity is lower. The idea is that the battery could be placed outside of the hand, for real applications, as most of the patients also have some sort of upper-arm socket where there is enough space to fit such a battery.

The new prototype also included a new layer, shown in figure 4.20, where the Arduino Nano board is placed and fixed by interference, also a more defined cable path is designed for the electronic connections, routing from the battery towards the microcontroller and the sensor.

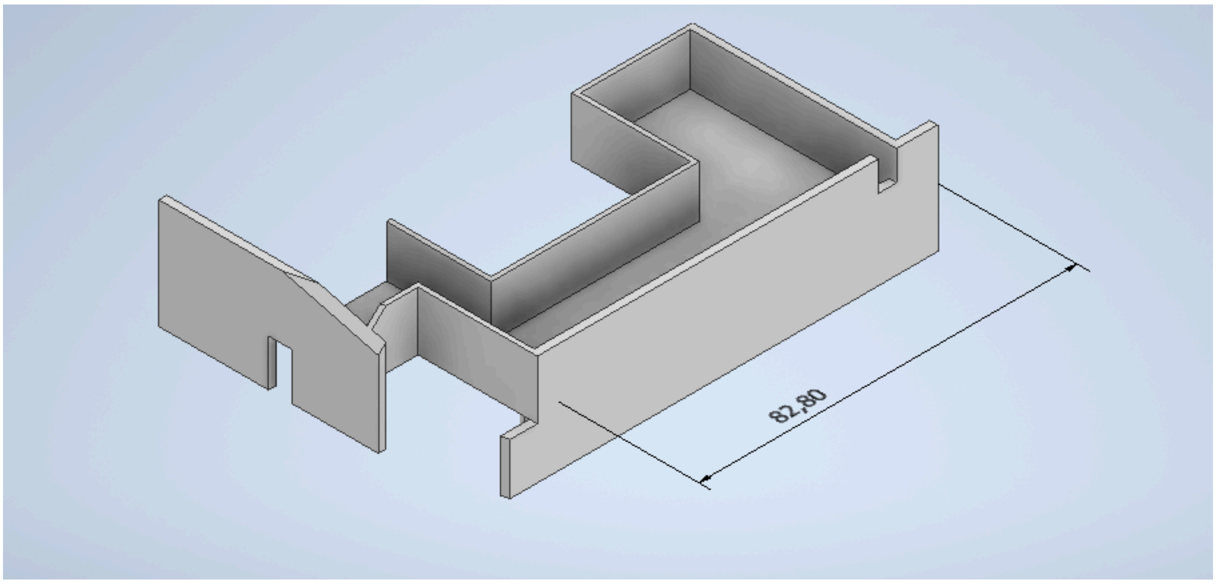

***Figure 4.20**, Capture of the microcontroller and cable holder*

This actually functioned as a new layer in the prosthesis, granting separation between mechanical and electrical components, it is kept in place by two screws and covered by the palm top that remained more or less invaried for the whole design process and is reported in figure 4.21.

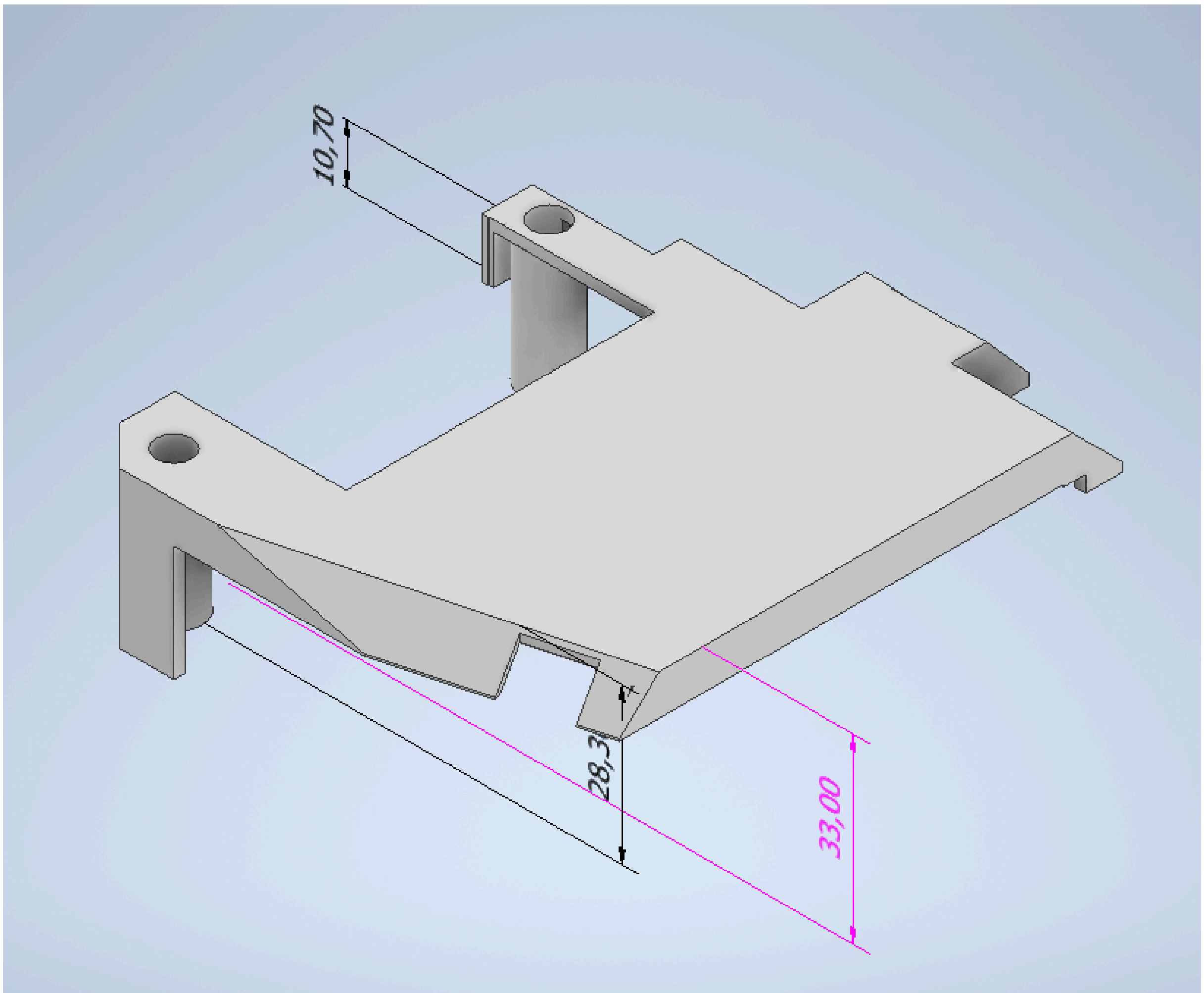

***Figure 4.21**, Capture of the prosthesis hand cover*

4.3 Prosthesis control

AD8232 sensor catches the potential difference between the electrodes and returns an analog value under the form of a voltage of up to 300 mV, according to the datasheet; the fact of it being analogic allows the use at high frequencies but implies also a certain degree of noise.

After various tests performed at different moments of the day on the various coworkers, it was clear that, while the hour had no remarkable effect on the measured value, the values perceived by the sensor under muscular contraction and at rest were very different for each individual, this made clear the need for a calibration for each patient. Because of this, the presence of the visible mini USB port on the side of the prosthesis allows users to modify the software running in the microcontroller.
Tests showed also that the noise of the sensor can not just be neglected, as many electro-magnetic fields are present in everyday environments and, while it won't be possible to always separate the noise from the actual signal some kind of filtering should be implemented.

As for the logic of actuation, the simple mechanics of the system allows for a similarly simple control, in fact all the parties involved on the project were satisfied with a simple threshold check, according to which if the signal measured by the sensor was higher than a certain level, that has to be tuned for each user, the hand would open, then close as soon as the next measurement is lower, closing the grasp.

The described algorithm has been implemented through ArduinoIDE and is reported in Annex 7.1, the selected filter is a simple IIR, first order low-pass filter, with a cutting frequency of 150 Hz, that keeps a safety margin over the 100 Hz expected of the useful part of the EMG signal. In order to implement the filter, the *setup* function, computed at the beginning of the algorithm, calculates the filtering constant α as:

$$\alpha = (1/f_s)/((1/2 \, * \, \pi \, * f_c) + (1/f_s)); \tag{3.1}$$

where f_s is the measuring frequency, settled ad 1kHz, and f_c is the selected cutting frequency.
This value is then used to compute the filtered input as:

$$signal_{filtered} = \alpha \, * \, signal_{in} + (1 - \alpha) \, * \, signal_{previous} \tag{3.2}$$

where $signal_{filtered}$ is the output of the filter, $signal_{in}$ is the analog value read from the sensor and $signal_{previous}$ is the value measured in the previous iteration.

The filter results in a behavior as represented in figure 4.22.

***Figure 4.22**, Graph of the filter frequency response*

The motor instead was simply controlled through the *Servo.h* library that allows the user to define the pin to which the output towards the motor is connected and controlled with the functions *servo.read()* and *servo.write()* that, respectively, return the state of the motor, as a position in degrees, and input the servo to move to a certain position.

5 Results and future work

The second prototype, first physically constructed, is shown in figure 5.1 with an appropriately designed open cover that allows to see the mechanisms inside of the hand; different cable fixing methods were being tested at the time, as it is possible to see on the tip of the fingers some star-headed pins are present, through which the cable passes, getting locked inside.

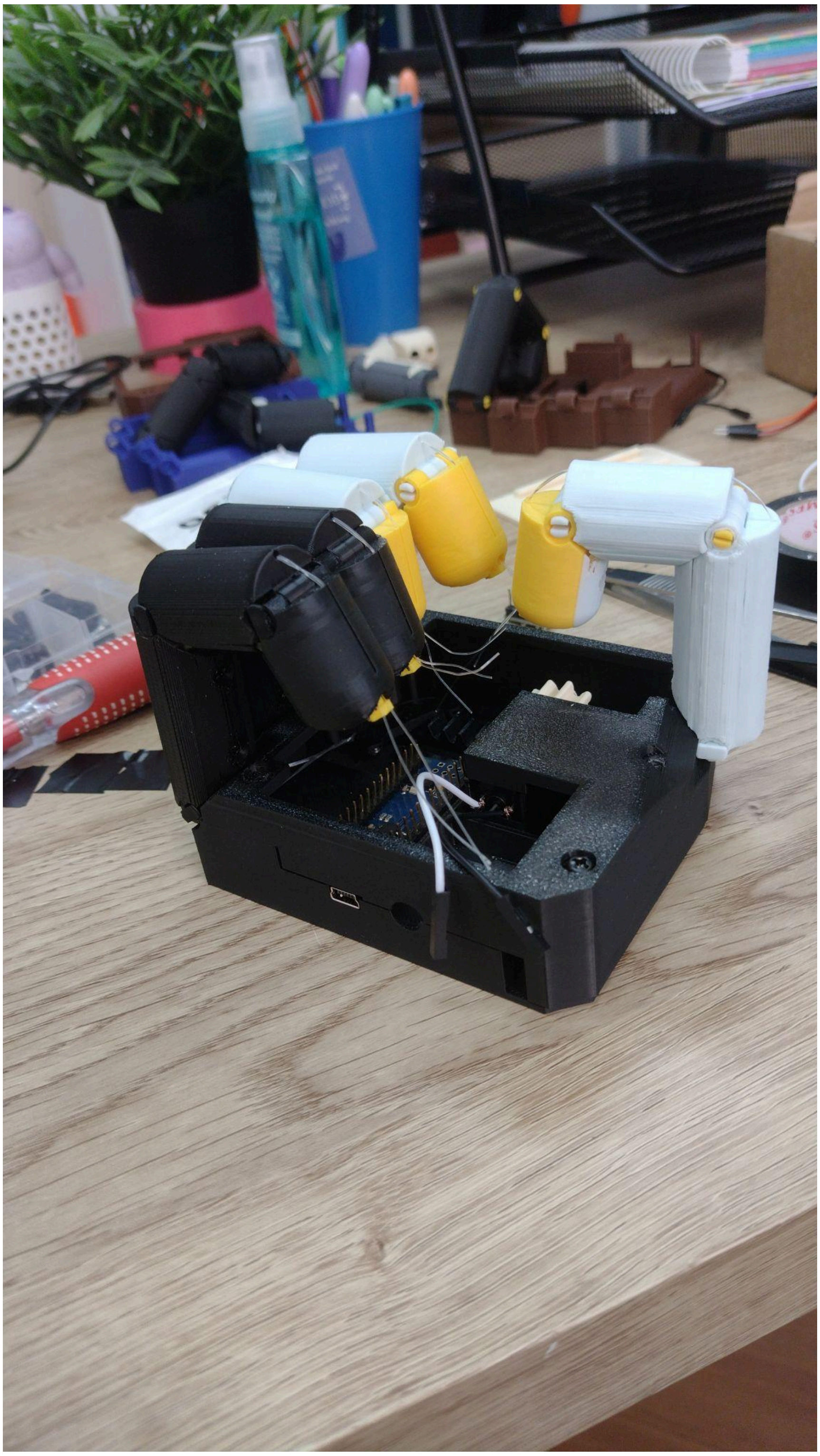

Figure 5.1, *Photo of the second hand prototype, fully assembled, with a special palm-cover for showing the inside*

Figure 5.2 and 5.3, show the last prosthesis with and without electric cables, it's possible to see also the elastic band tense between proximal phalanges and palm. Both the palm and the electronics base layers are in black in the picture, the color will be changed for better visibility.

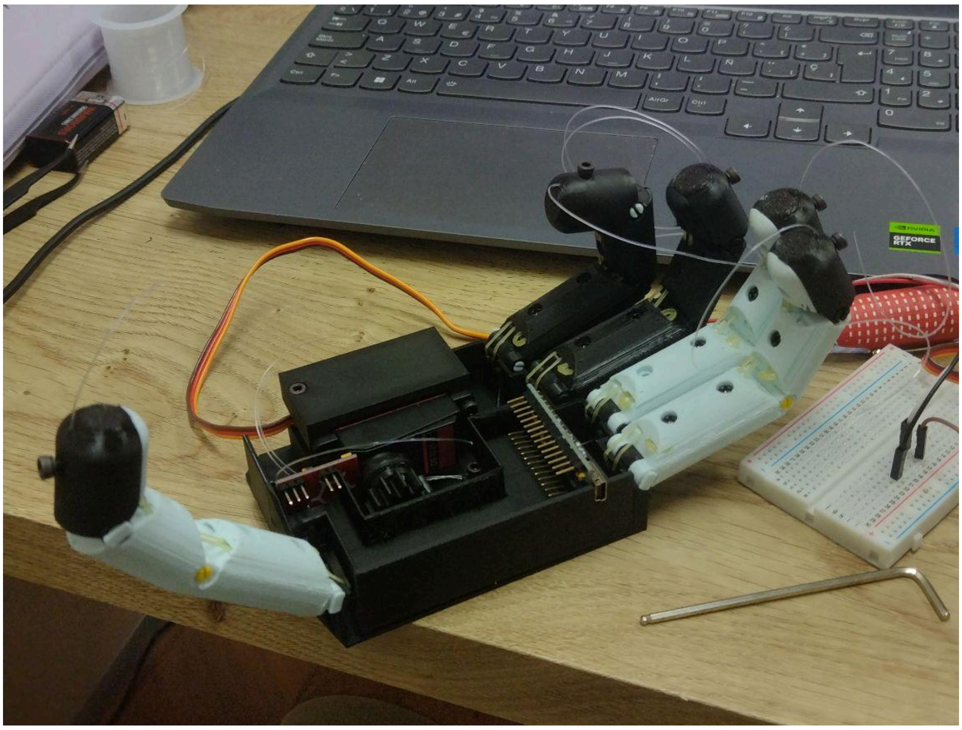

***Figure 5.2**, Photo of the final prototype before cabling was performed*

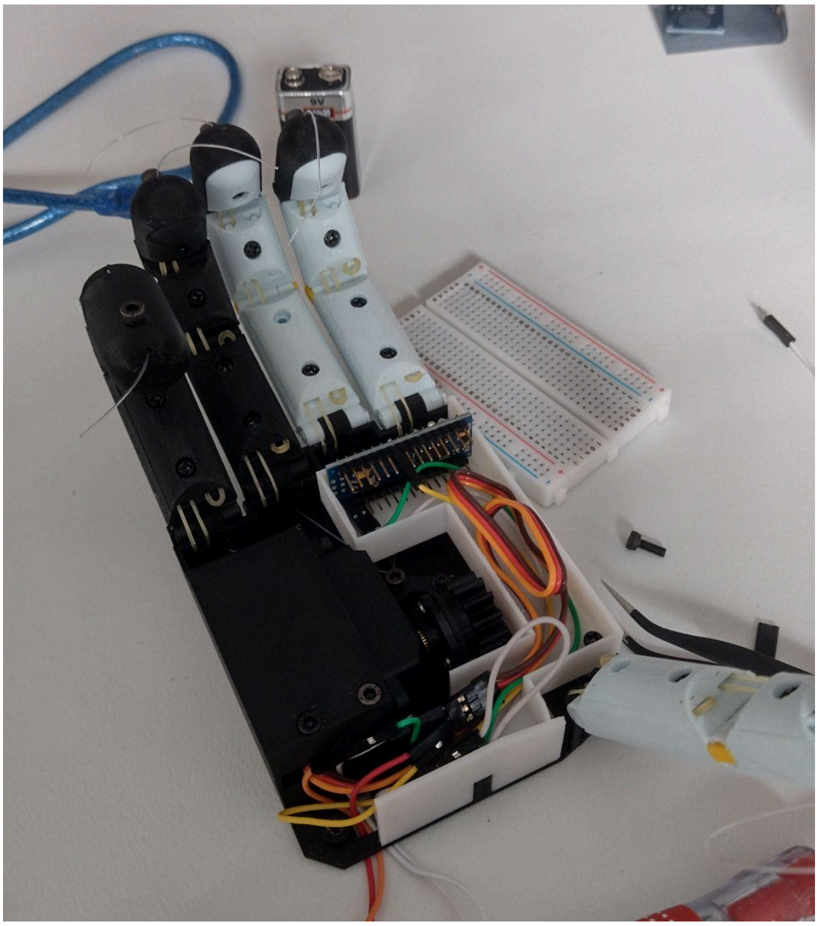

Figure 5.3, Photo of the inside of the prosthesis once cabled

Finally figure 5.4 shows the closed device with the palm cover and the first finger pulled, while the others are yet to be tightened; the base is black, while the electronics layer was reprinted in white, finally, the cover is printed in a skin-like color.
All the components needed to build the device are presented in figure 5.5, while in table 5.1, there is a sum up of their costs, obtained after a quick research on popular e-commerce websites for detailed product acquisition. The total cost of a single hand is less than 70 €, but this can be cut lower with a better suited purchase method, or by using non official microcontrollers that can be found for less than ¼ of the price reported in the table; even different motors can be assembled with appropriate springs tuning.

Figure 5.4, Photo of the closed hand prosthesis

Table 5.1, Average cost report of the component used for the thesis

Component	**Cost**
Motor N20 with reduction gearbox	26 €
Motor DS3225MG (25 kg/cm)	24 €
EMG sensor AD8232	16 €

Elastic bands (400 units)	7 €
Arduino Nano (3 units)	14 €
Electric jumpers	>1 €
M3 screws	>1 €
9V commercial battery	~4 €
Nylon cable (100 m)	5 €
PLA used for the print (~160 g)	~3 €

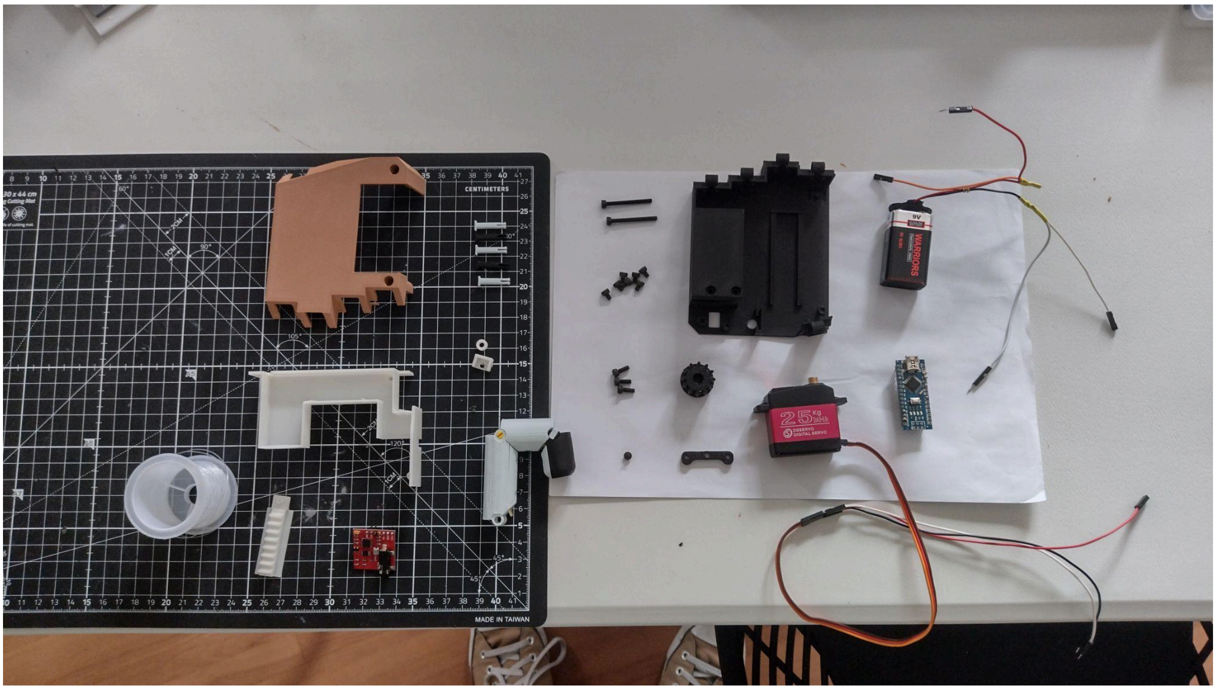

Figure 5.5, Photo of all the components needed for the assembly of the hand

A remarkable point that is highlighted by these considerations is the availability of all the components used, the majority of which can be found in any electronics or bricolage stores, but are also cheap when purchased online without the need of contacting a proper supplier. Furthermore, it is notable the reduced amount of elements required to assembly the fully functional hand, both in terms of printed parts and acquired components; this make so that also the assembling operations, as well as the maintenance, will be quick and simple, with the elements that are most likely to break being in the outer part of the prosthesis, allowing for even further simplicity in the substitution.

Discussing about functionalities, the hand was tested with various everyday objects, like water bottle, coffee mug, glass, aluminum can, small ball, pen and mouse: the hand performed well with bigger objects while struggled to grab the pen; it was not able to lift heavy objects, like the water bottle when completely full; also motor tends to move under the effect of big torques deforming the plastic cover, but this could be simply resolved by increasing the material density in that portion of the print.

In conclusion, the simple look of the project comes from hours spent on the design, multiple tests and brainstorming sessions were also held in order to cut as much as possible, compressing the

functionality of multiple elements into single ones and overall excluding whatever could be excluded from the hand.
The parties were more than satisfied with the outcome of the prototype, that, while still being usable, has a lot of improvement potential: first of all, the possibility to print the whole hand, or just the outer part of the phalanges and the palm-top in TPU should be considered, as this would provide way better friction with objects and augmented contact area, overall increasing the grasping capability. Another upgrade involving TPU could be the print of the fingers as one-of, avoiding the need for the interphalangeal joints and elastic components that could be substituted by appositely tuned geometries, thanks to the elastic properties of the material; this could simplify even more the assembling, while reducing the possibility of finger breaking.
Another winning point of the design is the possibility to easily upgrade the prosthesis, as different combinations of rubber bands can be mounted, either going for stronger bands or for weaker, increasing or reducing the number of them per joint; this, coupled with appropriate motor substitutions could straight up upgrade according to the performances desired by the user; in fact, more powerful motors than the one used for the prototype can be easily found in equal or similar dimensions, reaching up to 75 kg/cm for comparable prices, even from the same producer, on mainstream e-commerce platforms.
Another consideration to be done is that the result performances of the prototype just discussed, were counting on a simplified design that was still lacking the anthropomorphic appearance and proportion of the fingers; this upgrade alone could drastically raise the grasping performances, other than give the prosthesis a more appealing look.

Luckily, while this thesis stops at this step of the project, all of these considerations were already discussed with the parties, and the team from Ayúdame3D will continue to develop and test the hand with the objective of bringing it online and ready for distribution before summer 2025.
This being stated, the aim of the thesis was to design and produce a functioning prototype of a low cost prosthetic hand for wrist level amputees, this, as well as the specifications of being self-contained, adaptive and externally powered have all been accomplished.

The results of the thesis not only stand in the academic field, in fact being part of the development of this a product is a source of great pride, as it is likely to help other people’s daily life while being largely available, thanks to the reduced cost,

Furthermore, the studies done before the practical part, at the beginning of the project, as well as the skills and the experience acquired during the work, played an important role in the successful application for a position in the research and development team of Bionit Labs, whose Adam’s Hand was one of prosthesis being studied with more interest.

6. Due thankings

While initially reluctant do write this, at the end of the writing the thesis seems incomplete without a thank to all those who supported me not only during the work, but also through all the university: Mamma, Papà, Marci, Ila, Angelo, Andrea, Simone, Martin, Nonni, Zii, Mattia, Lello, Giovanni, Roberto, Cinghiale, Antonio, Aldo, friends at Cus Torino Rugby and mates atl Rugby Industriales, in particular Alejandro Sanchez, the guys at Ayúdame3D and the professors.

7. Annexes

7.1 Arduino code implemented in the microcontroller

```
#include <Servo.h>


Servo motore;

int pos=0;

int treshold=75;


const float fc = 150.0;   // cutting frequency

const float fs = 1000.0;  // measuring frequency (rounded up for
safety)

const int analogPin = A0; // Pin analogico per il sensore EMG


float alpha;

float previousOutput = 0;


void setup() {

  Serial.begin(9600);


  float dt = 1.0 / fs;

  float RC = 1.0 / (2 * 3.1416 * fc);

  alpha = dt / (RC + dt);


  motore.attach(4);

  motore.write(0);

}


void loop() {
```

```
  int EMG_in = analogRead(analogPin);

  float filtValue = alpha * EMG_in + (1 - alpha) * previousOutput;

  previousOutput = filteredValue;

  Serial.println(filtValue);

  if(filtValue > treshold) {
    mototre.write(180);
  }
  else{
    motore.write(0);
  }

  delay(1000 / fs);

}
```

8. References

A.M. Dollar, R.D. Howe. (2010). The highly adaptive SDM Hand: design and Performance evaluation. *The international journal of robotics research*.

Catalano MG, Grioli G, Farnioli E, Serio A, Piazza C, Bicchi A. (2014). Adaptive synergies for the design and control of the Pisa/IIT SoftHand. *The International Journal of Robotics Research*.

I. Hussain, Z. Iqbal, M. Malvezzi, L. Seneviratne, D. Gan, D, Prattichizzo. (2018). Modeling and prototyping of a soft prosthetic hand exploiting joint compliance and modularity. *International conference of Robotics and Biomimetics.* Kuala Lampur.

J. Senthil Kumar, M. Bharath Kannan, S. Sankaranarayanan, A. Venkata Krishnan4. (2013). Human Hand Prosthesis Based On Surface EMG Signals for Lower Arm Amputees. *International Journal of Emerging Technology and Advanced Engineering* .

Jang C., Yang H., Lee S., Kwon J, Yun B., Jeong h. (201). A survey on activities of daily living and occupations of upper extremity amputees. *Annals of Rehabilitation Medicine*.

Jelle ten Kate, Gerwin Smit & Paul Breedveld. (2017). 3D-printed upper limb prostheses: a review. *Disability and Rehabilitation: Assistive Technology*.

Joseph T. Belter, MS, BS; Jacob L. Segil; Aaron M. Dollar; Richard F. Weir. (2013). Mechanical design and performance specifications of anthropomorphic prosthetic hands: A review. *Journal of Rehabilitation Research and Development*.

Laura H. B. Huinink, Hanneke Bouwsema, Dick H. Plettenburg, Corry K. van der Sluis, Raoul M. Bongers. (2016). Learning to use a body-powered prosthesis: changes in functionality and kinematics. *Journal of NeuroEngineering and Rehabilitation*.

Mathieu Baril, Thierry Laliberte, Franc¸ois Guay and Clement Gosselin. (2010). STATIC ANALYSIS OF SINGLE-INPUT/MULTIPLE-OUTPUT TENDON-DRIVEN. *International Design Engineering Technical Conferences & Computers and Information in Engineering Conference* . Montreal.

Medynski, C., & Rattray, B. (2011). Bebionic prosthetic design. *MEC 11 Raising the Standard: Proceedings of the 2011 MyoElectric Controls/Powered Prosthetics Symposium.* Chicago.

N. Dechev, W.L. Cleghorn, S.Naumann. (2001). Multiple finger, passive adaptive grasp prosthetic hand. *Mechanism and Machine theory*.

T. Lalibertè, M. Baril, F. Guay, C. Gosselin. (2010). TOward the design of a prosthetic underactuated hand. *Mechanical sciences*.

ten Kate, J., Smit, G., & Breedveld, P. . (2016). 3D-printed upper limb prostheses: a review. *Disability and Rehabilitation: Assistive Technology*.