Proceedings of the SICE Annual Conference 2016
Tsukuba, Japan, September 20-23, 2016

Model Based Development of an Integrated Control of Front Steering and Torque Vectoring Differential Gear System

Yutaka Hirano [1]

[1]Future Project Division, Toyota Motor Corporation, Shizuoka, Japan
(Tel : +81-55-997-7821; E-mail: yutaka_hirano@mail.toyota.co.jp)

Abstract: For future low carbon mobility society, new-type electric vehicles are developed actively in recent period. Those new EVs have integrated power unit which take place of conventional engine, transmission and differential gear components. Additionally it is rather easy to integrate torque vectoring function to those power units using gear sets to control torque distribution between left wheel and right wheel. In this paper, model-based development of an integrated control of front steering angle and torque vectoring differential (TVD) gear system is described. A new control logic was developed using model matching control to let the vehicle yaw rate and vehicle slip angle follow the desired dynamics. Simulation results using a single track model of vehicle dynamics are shown to prove the efficacy of the proposed control. Though, full vehicle model considering all of vehicle dynamics and drive train motion using Modelica clarified the problem of this method in actual cases. Finally modified control was developed and confirmed by both single track model and full vehicle model.

Keywords: Model Based Development, Vehicle Dynamics, Torque Vectoring, Model Matching Control, Modelica

1. INTRODUCTION

To satisfy needs for future low-carbon mobility society, development of many new electric vehicles (EVs) is increasingly active in recent years. Additionally many new proposals about integrated electric power train which also has torque vectoring capability are presented. In this paper, model based control of an integrated control of TVD gear and active front steering is developed using model matching control. Single track model of vehicle dynamics is used to derive and verify the new control. Finally the developed and modified controls were verified by using both the single track model and the full vehicle model.

2. EXPERIMENTAL EV

The proposed experimental EV has specifications as shown in Table 1. Compared with a conventional small-class passenger car, the new EV has characteristics of lighter vehicle weight, smaller yaw moment of inertia, lower height of the center of gravity (CG) and lower rolling resistance coefficients (RRC) value of tires. Because of these characteristics, this new EV is expected to have better handling and lower energy consumption than conventional vehicles. On the other hand, because of lighter weight and lower value of tire normalized CP (Cornering Power), this new EV seems more sensitive against external disturbances such as crosswind and road irregularity than the conventional cars. To cope with this problem, direct yaw moment control (DYC) was applied by using a new integrated transaxle unit for rear axle which has a main electric motor and also TVD gear unit with a control motor. Additionally, to control both yaw rate and slip angle of the vehicle independently, another control input of active front steering (AFS) was introduced.

Table 1 Specifications of new experimental EV

	New EV	Conventional car
Vehicle Mass	750 kg	1240 kg
Yaw Moment Inertia	869 kgm^2	2104 kgm^2
Wheelbase	2.6 m	2.6 m
Front : Rear Weight Distribution	0.48 : 0.52	0.62 : 0.38
Height of CG	0.38 m	0.55 m
Tire RRC	5×10^{-3}	8.8×10^{-3}
Tire Normalized CP	16.1	20.4

3. VEHICLE MODEL

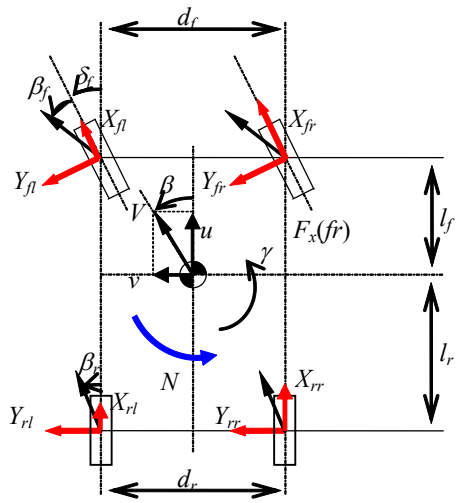

Fig.1Single track vehicle model

Fig.1shows a single track vehicle model to derive the control logic. The simplified equations of motion by this single track vehicle model become as follows.

$$M\frac{dV}{dt} = F = (X_{rr} + X_{rl}) \tag{1}$$

$$MV\left(\frac{d\beta}{dt} + \gamma\right) = 2Y_f + 2Y_r \tag{2}$$

$$I_z\frac{d\gamma}{dt} = 2l_f Y_f - 2l_r Y_r + N \tag{3}$$

where

$$Y_f = -K_f\beta_f = -K_f\left(\beta + \frac{l_f}{V}\gamma - \delta_f\right) \tag{4}$$

$$Y_r = -K_r\beta_r = -K_r\left(\beta - \frac{l_r}{V}\gamma\right) \tag{5}$$

$$N = d_r(X_{rr} - X_{rl}) \tag{6}$$

Here,

- β : Vehicle slip angle,
- γ : Vehicle yaw rate,
- M : Vehicle mass,
- V : Vehicle velocity,
- I_z : Vehicle yaw moment of inertia,
- $l_f(l_r)$: Distance from the CG to front (rear) axle, (CG: Center of Gravity)
- $d_f(d_r)$: Tread of front (rear) axle,
- X_{**} : Longitudinal force of each tire,
- $Y_f(Y_r)$: Lateral force of front (rear) tires,
- δ_f : Steering angle of front tire,
- F : Vehicle driving force,
- N : Direct yaw control moment by TVD.

K_f and K_r are the equivalent cornering power of front and rear tire respectively.

If driving force F and DYC moment N can be calculated by some control logic, then the target longitudinal forces of left and right rear wheels to be realized by TVD power unit become as follows from Eq. (1) and Eq. (6).

$$X_{rr} = \frac{1}{2}\left(F + \frac{N}{d_r}\right) \tag{7}$$

$$X_{rl} = \frac{1}{2}\left(F - \frac{N}{d_r}\right) \tag{8}$$

4. CONTROLLER DESIGN

4.1. Longitudinal Driving Force Controller

Let us suppose that the desired value of vehicle speed, vehicle yaw rate and vehicle slip angle are defined as V_{ref}, γ_{ref} and β_{ref} respectively.

The desired vehicle driving force F can be calculated as below by PI feedback control and Eq. (1).

$$F = M\frac{dV_{ref}}{dt} + K_{PF}(V_{ref} - V) + K_{IF}\int(V_{ref} - V)dt \tag{9}$$

Here K_{PF} is a proportional feedback gain and K_{IF} is an integral feedback gain.

4.2 Model Matching Controller of Lateral Dynamics

For the lateral dynamics, the state space form of the vehicle dynamics with TVD and AFS control becomes as follow from Eqs. (2) and (3).

$$\dot{x} = Ax + \overline{B}\overline{u} \tag{10}$$

$$x = \begin{bmatrix}\beta \\ \gamma\end{bmatrix}, \quad \overline{u} = \begin{bmatrix}\delta_f \\ N\end{bmatrix}$$

$$A = \begin{bmatrix} -\dfrac{2(K_f + K_r)}{MV} & -1 - \dfrac{2(l_f K_f - l_r K_r)}{MV^2} \\ -\dfrac{2(l_f K_f - l_r K_r)}{I_z} & -\dfrac{2(l_f{}^2 K_f + l_r{}^2 K_r)}{I_z V} \end{bmatrix} = \begin{bmatrix} a_{11} & a_{12} \\ a_{21} & a_{22} \end{bmatrix} \tag{11}$$

$$\overline{B} = \begin{bmatrix} \dfrac{2K_f}{MV} & 0 \\ \dfrac{2l_f K_f}{I_z} & \dfrac{1}{I_z} \end{bmatrix} = \begin{bmatrix} b_{11} & b_{12} \\ b_{21} & b_{22} \end{bmatrix}$$

Please note that the elements of the matrix A of the Eq. (10) as shown in the Eq. (11) are dependent on the vehicle velocity V, namely time varying matrix variables.

The desired dynamics of vehicle yaw rate and vehicle slip angle are assumed as the first order lag function of steering wheel input as the Eq. (12). It is well known that the response of both yaw rate and slip angle become to the second order lag function of the steering input when no control is applied. This fact results in that the ordinary drivers tend to respond to steer with time lag against the vehicle motion and tend to result in vehicle spin when the vehicle motion becomes unstable such as on the slippery road. On the other hand, it becomes easier for drivers to stabilize the vehicle if the response of the vehicle motion will become to the first order lag function.

$$x_d = \begin{bmatrix}\beta_{ref} \\ \gamma_{ref}\end{bmatrix} = \begin{bmatrix} \dfrac{k_\beta}{1 + s\tau_\beta}G_{\beta 0} \\ \dfrac{k_\gamma}{1 + s\tau_\gamma}G_{\gamma 0} \end{bmatrix}\delta_s \tag{12}$$

Here, s is Laplace operator. $G_{\beta 0}$ and $G_{\gamma 0}$ are steady state gain of slip angle and yaw rate respectively from the steering wheel input angle δ_s. Also k_β and k_γ are gain of desired slip angle and desired yaw rate from the steady state gain of each state variables. τ_β and τ_γ are time constant of desired slip angle and desired yaw rate as the first order lag function.

The state space form of the desired dynamics can be written as below from the Eq. (12).

$$\dot{x}_d = A_d x_d + E_d \delta_s \tag{13}$$

Here,

$$A_d = \begin{bmatrix} -\frac{1}{\tau_\beta} & 0 \\ 0 & -\frac{1}{\tau_\gamma} \end{bmatrix}, \quad E_d = \begin{bmatrix} \frac{k_\beta}{\tau_\beta} G_{\beta 0} \\ \frac{k_\gamma}{\tau_\gamma} G_{\gamma 0} \end{bmatrix}.$$

Assume the error between actual state variables and desired state variables as $e = x - x_d$. A dynamic state equation of this error variable can be obtained as below by subtracting Eq. (13) from Eq. (10).

$$\dot{e} = Ae + \bar{B}\bar{u} + (A - A_d)x_d - E_d\delta_s \tag{14}$$

Let's assume a virtual control input as follow.

$$\bar{U} = \bar{B}\bar{u} + (A - A_d)x_d - E_d\delta_s \tag{15}$$

Then the Eq. (14) becomes as follow.

$$\dot{e} = Ae + I\bar{U} \tag{16}$$

Here I is an unit matrix. For the linear system of the Eq. (16), we can design a feedback control

$$\bar{U} = -Ke \tag{17}$$

by using various kind of linear control theory. For example, we can calculate feedback gain K by LQR (Linear Quadratic Regulator) so that the following criteria function is minimized.

$$J = \int_0^\infty (e^T Qe + \bar{U}^T R\bar{U})dt$$

Here, Q and R are weight matrixes. The gain matrix K is obtained by solving following Riccati equation.

$$A^T S + SA - SIR^{-1}I^T S + Q = 0$$

$$K = R^{-1}I^T S$$

Please note that K is dependent on vehicle velocity because the matrix A is velocity dependent as shown in Eq. (11). Fig. 2 shows an example of the elements of feedback gain K as a function of the vehicle velocity V.

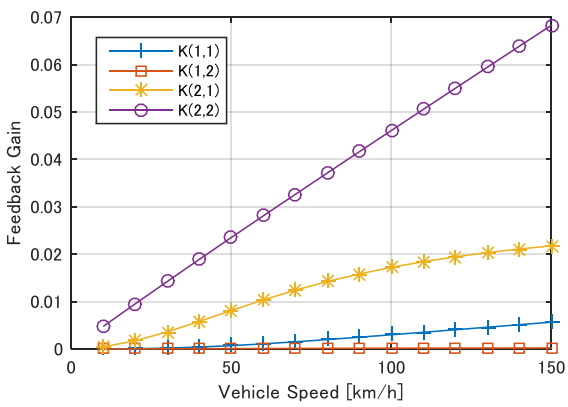

Fig. 2 Plot of LQR gain according to vehicle speed

Finally the actual control input is calculated from the Eq. (15) as below.

$$\bar{u} = \bar{B}^{-1}\{-Ke - (A - A_d)x_d + E_d\delta_s\} \tag{18}$$

Here, $\bar{B}^{-1}$ is an inverse matrix of $\bar{B}$. ($\bar{B}^{-1}\bar{B} = I$.) From the Eq. (18) it is understood that the control input consists of a feedback term of the state error and feedforward terms of both desired state variables and also steering wheel input angle.

5. SIMULATION MODELS AND RESULTS

5.1. Single Track Vehicle Model

To confirm the validity of above mentioned model matching control, simulation test based on single track vehicle model was performed. First of all, we should handle time-varying linear state space system expressed by Eqs. (10) and (11). To cope with this problem, the simulation model was developed by object-oriented multi-physics modeling language Modelica. It was easy to describe time-varying state space system as Eqs. (10) and (11) by Modelica.

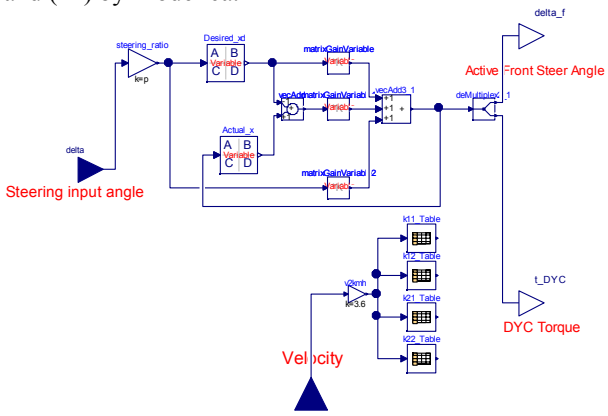

Fig. 3 Modelica model of the controller

Fig. 3 shows a diagram of Modelica model of the model matching controller using the single track vehicle model as defined by Eq. (18). The definition of the time varying linear state system of both plant and desired dynamics as mentioned above is also written in this model.

Fig. 4 shows simulation results using the single track model. Vehicle accelerates from 10km /h to 100km/h between time 1 sec to 10sec. The steering input angle moves as 1Hz sinusoidal curve. Desired dynamics was settled as k_β = 0, $k_\gamma = 1$. τ_β and τ_γ are settled as corresponding value of cut-off frequency of 1.3 Hz. The results of vehicle slip angle and yaw rate are shown not only in the nominal plant but also there were some perturbation of vehicle mass (M) and tire cornering power (CP). In the nominal case, the results of slip angle and yaw rate were exactly matched with the desired values. It is shown that the model matching control is not so robust against the change of CP. The improvement of the control should be of future research.

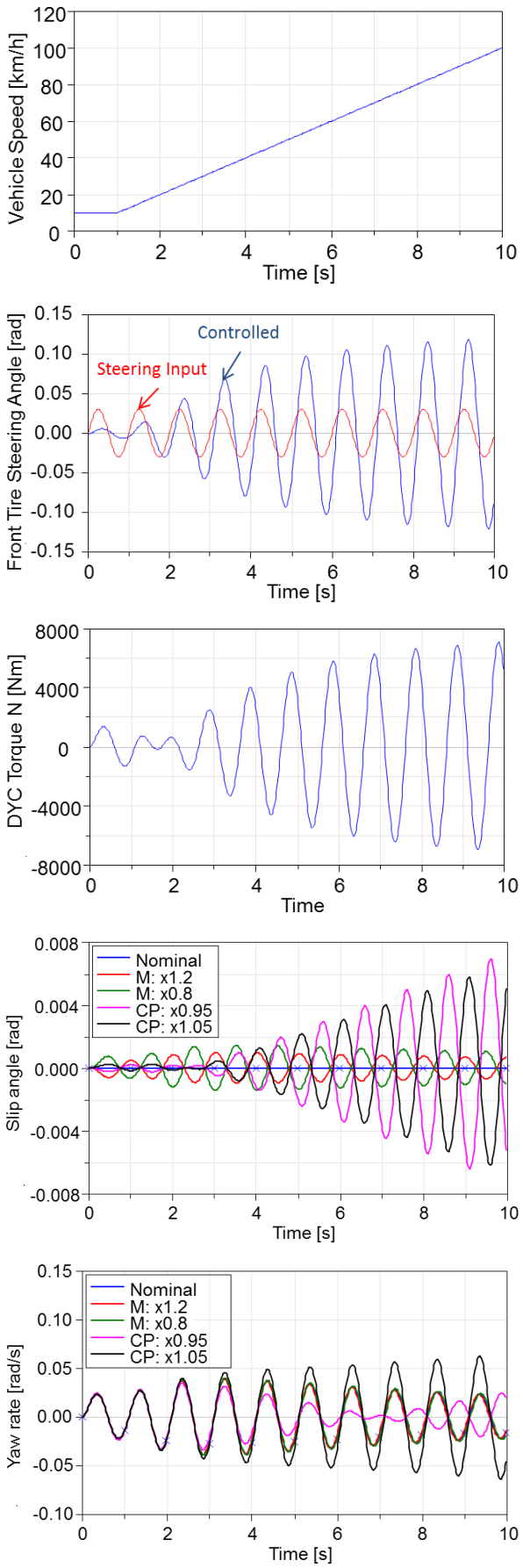

Fig. 4 Plot of vehicle velocity and steering input angle

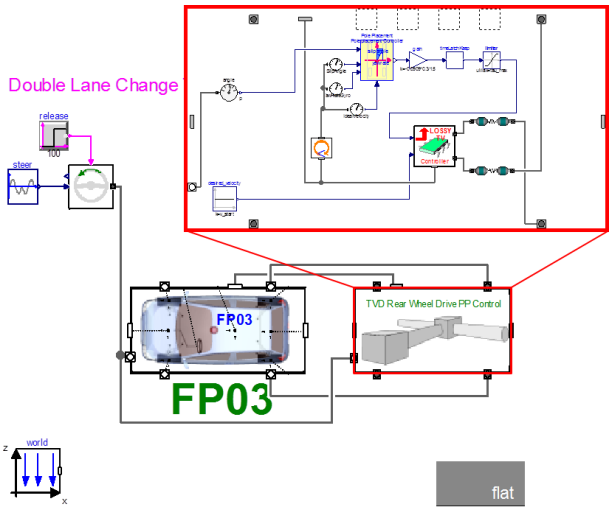

Fig. 5 Structure of full vehicle test model

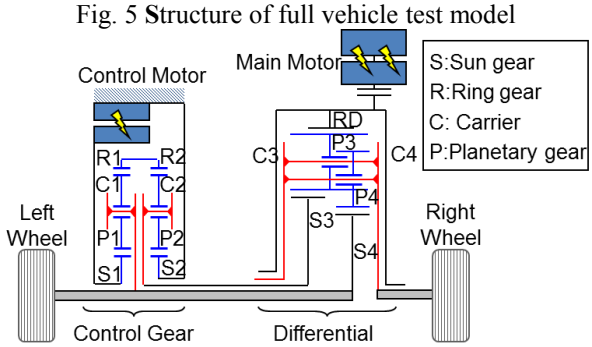

Fig. 6 Torque vectoring differential (TVD) driveline

5.2 Full vehicle model

The similar full vehicle model as previous research [1][2] was used for full-vehicle simulation. The model was developed based on Vehicle Dynamics Library of Modelica[3] and was built as a full 3-dimentional (3D) multi-body-dynamic system (MBS) model. Component models of control systems such as TVD gearbox, electric motor and inverter were added with the full vehicle model. Fig. 5 shows the top level of the model hierarchy of the full vehicle test model and also the power train model with the controller. About the details of the full vehicle model, please refer to the reference.

For the TVD gear train, a driveline structure referencing the MUTE project of the Technische Universität München (TUM) [4] was selected and the TVD model was constructed using Modelica Power Train Library [5]. Fig. **6** shows the configuration of the gear trains. Torque from the main motor is distributed equally to the left wheel and the right wheel through the differential gear. The torque distribution between the left wheel and the right wheel can be controlled by changing the torque input of the control motor.

3D MBS model of suspension, steering and body were installed to calculate vehicle dynamics characteristics. Suspension model was constructed as an assembled model of each suspension linkage, joints and force elements such as spring, damper and bushing. Non-linear tire model based on 'Magic Formula' model (Pacejka02) was used to calculate combined lateral force and longitudinal force of each tire. Steering

model considered the characteristics of viscous friction of steering gear box and steering shaft as well as steering shaft stiffness.

5.3 Results of full vehicle simulation

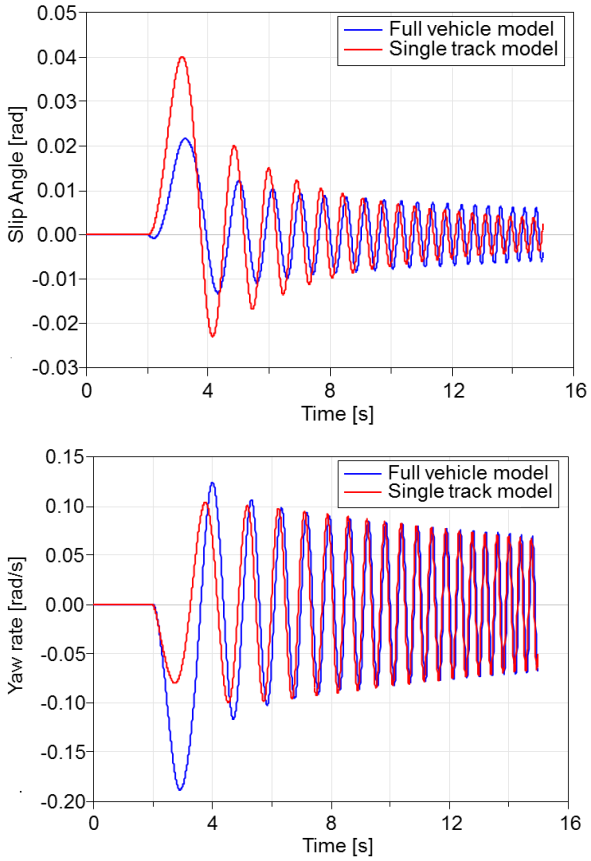

Fig. 7 Comparison between full vehicle model and single track model

At first, the result of the full vehicle model and the single track model was compared in a case that no control was applied. Steering input angle was given as a sinusoidal sweep signal from 0.1 Hz to 5Hz at constant vehicle speed. Fig. **7** shows the results of vehicle slip angle and yaw rate response. There was some difference especially in the low frequency response between the single track model and the full vehicle model. The reason of this result is assumed that the approximation when used to derive the equation of the single track model was big. Actually the left side of equation (2) should be

$$\mathrm{M}\frac{\mathrm{d}v_y}{\mathrm{dt}} = M\frac{\mathrm{d}}{\mathrm{dt}}(V\tan^{-1}\beta + V\gamma)$$

in precise. Also the non-linearity of the tire characteristics and also effects of many losses and stiffness of mechanical parts are not considered in the single track model. This result indicates that we should be careful when designing controllers based on the single track model.

Next, a simulation emulating double lane change maneuver was performed. Though, in this case, a problem that the vehicle motion of the full vehicle model became unstable when applying the control law shown in Eq. (18). The reason was that by the default gain of the feed forward control parts, the controlled steering angle exceeded the actual physical limit and turned more than 6[rad], that is, about 360[deg]. So the compensation for the feed forward parts was applied so that the controlled front steering angle will not be so different from the steering input angle. (Actually the feed forward parts were gained by 0.25.) After this modification, the vehicle response became stable in the actual case using the full vehicle model. Also for the feedback part, we should be careful to select the value of weight matrix element when designing LQR controller. Also the weight for the steering angle control was lowered than that for the DYC torque because of the physical limit of the steering angle. These problems would be able to modify the controller design from LQR to MPC (Model Predictive Control) which can consider the limitation of the actuators, but there would occur a conflict of calculation time of the controller in such a case.

Fig. **8** shows the results of the full vehicle simulation. For comparison, the vehicle slip angle and yaw rate calculated by the single track model were also shown. As suggested before, the results of vehicle slip angle of the full vehicle model and the single track model were different. Though, the modified model matching control seems to work well to let the actual state variables trace the desired variables.

Also side wind test was simulated using the full vehicle model. Fig. **9** shows the results. There is a side wind of 20[m/s] while time = 2 sec to 3.5 sec when the vehicle is running at 120[km/h] with fixed steering input angle of 0[rad]. The effect of the proposed control was shown compared with the case of no control was applied.

6. CONCLUSION

A new integrated control of DYC and front steering angle was proposed using model matching control. By the simulations using both single track model and full vehicle model based on Modelica, the effect of the control was investigated. Also the limitation of control design based on the single track model was clarified by comparing the results of the simulation by both single track model and full vehicle model. Some know-how about controller design was also obtained from the full vehicle model simulation considering various limitations of the actual vehicle.

To cope with the limitation of actual vehicle such as the limitation of actuator range, future work is expected to consider those limitations for example by using MPC.

REFERENCES

[1] Y. Hirano, S. Inoue and J. Ota, "Model-based Development of Future Small EVs using Modelica", *Proceedings of Modelica Conference 2014*, 2014.

[2] Y. Hirano, S. Inoue and J. Ota, "Model Based Performance Development of a Future Small Electric Vehicle using Modelica", *Proceedings of CCC&SICE 2015*, 2015.

[3] Modelon, A.B., Vehicle Dynamics library Users Guide (Version 1.8), 2014

[4] B. Höhn et al., Torque Vectoring Driveline for Electric Vehicle, *Proceedings of the FISITA 2012 World Automotive Congress*, Vol. 191, pp. 585-593, 2013.

[5] DLR(German Aerospace Center), Power Train Library Users Guide (Version 2.1.0), 2013

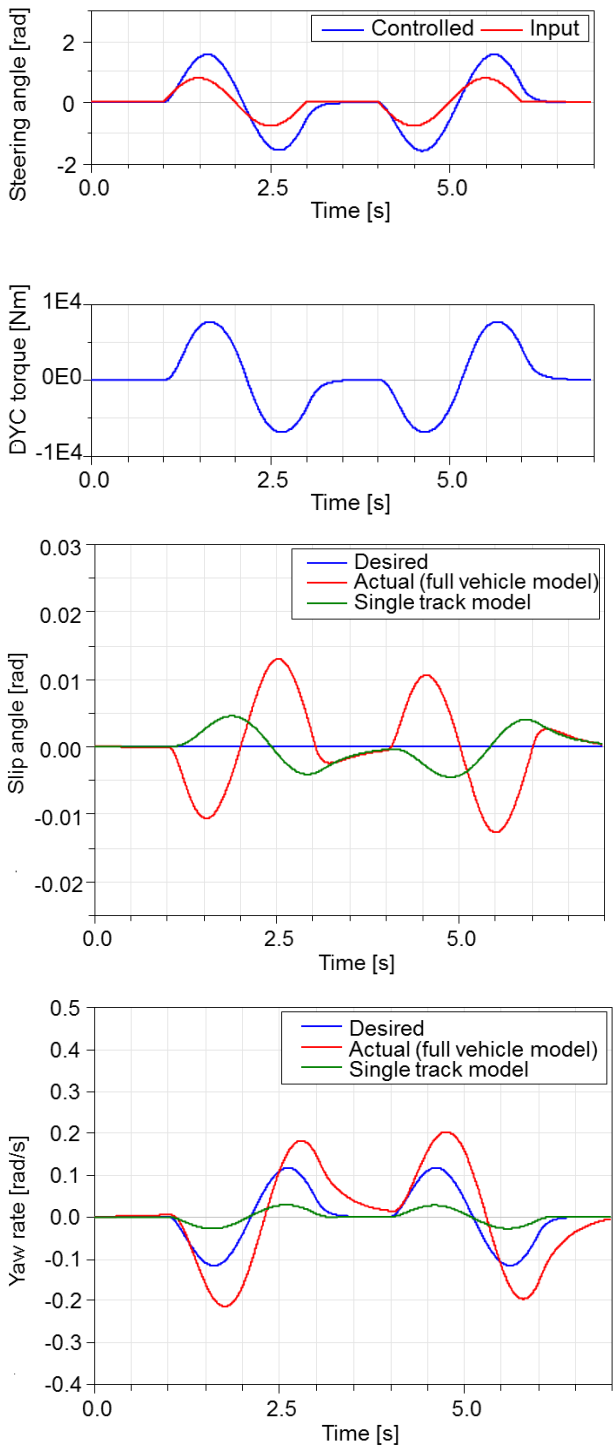

Fig. 8 Full veheicle simulation result for double rane change test

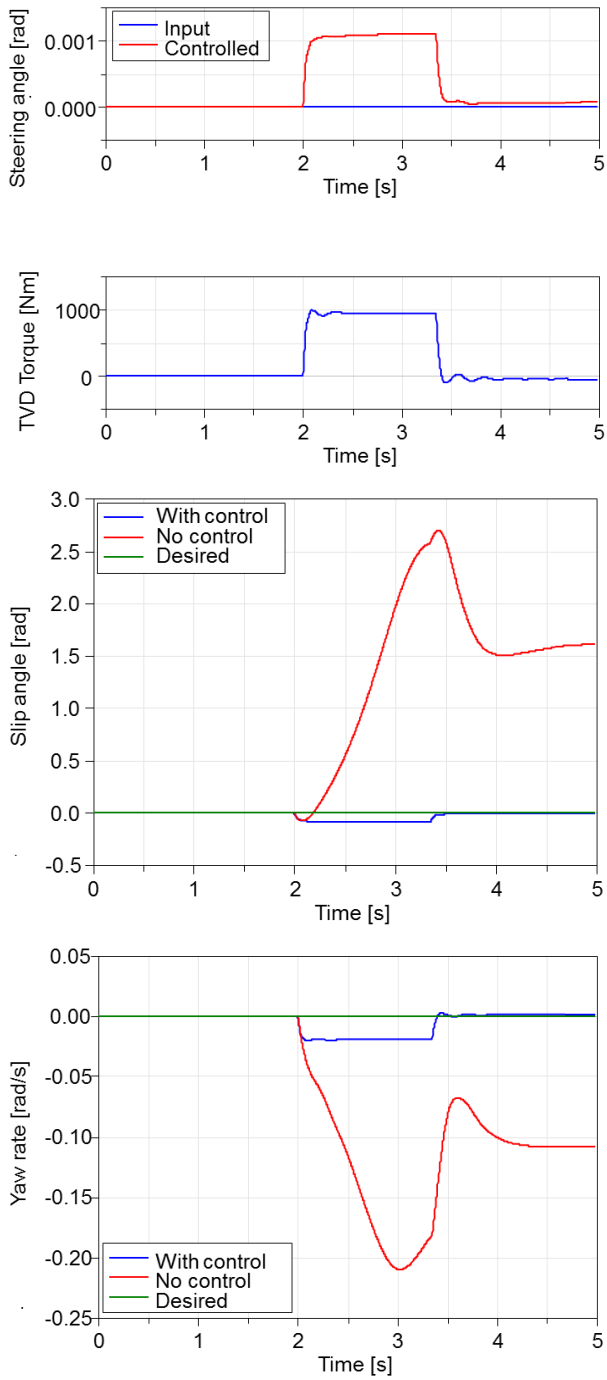

Fig. 9 Full vehicle simulation result of side wind test