NEW TECHNOLOGIES

Development of Super AYC

Yuichi USHIRODA* Kaoru SAWASE* Naoki TAKAHASHI*
Keiji SUZUKI* Kunihiro MANABE*

Abstract

The AYC (Active Yaw Control) system installed on the LANCER EVOLUTION IV in 1996 greatly improved the cornering performance of 4WD vehicles by controlling the torque difference between right and left tires, thus equalizing the load on each of the four tires. Following the improved performance of the EVOLUTION series, further improvement of AYC functions has been desired for sports driving. We have therefore developed a new Super AYC, which increases the degree of control and improves the cornering performance as well as traction performance.

Key words: *Vehicle Dynamics, Differential Gear*

1. Introduction

The AYC system[1] directly controls the yaw moment acting on a vehicle by creating left-right differences in the driving and braking forces acting on the vehicle's rear wheels. Concomitantly uniform distribution of tire loading between the four wheels enhances the vehicle's cornering performance. Further, the system's operation does not conflict with the driver's acceleration and braking inputs since torque transfers depend only on the torque difference between the left and right wheels and cause almost no change in the total driving and braking forces of the four wheels. Users with any level of driving skill can thus enjoy system's benefits. The system has been highly evaluated since its initial adoption in the Mitsubishi LANCER EVOLUTION IV in 1996.

The AYC's control processes have been fine-tuned a number of times to enhance cornering performance in line with the LANCER EVOLUTION's year-by-year evolution. As the dynamic performance potential of the vehicle has been increased, however, the system's capacity has become inadequate to fully exploit it. The need for a system permitting higher levels of cornering performance and traction performance has become particularly critical for motorsport applications.

To address this situation, Mitsubishi Motors Corporation has developed the Super AYC, which is capable of creating greater torque differences, i.e., greater torque transfers, between the left and right wheels, thereby providing the car with higher cornering performance and higher traction performance. This report describes the technical features of the Super AYC.

2. Optimum torque transfer amounts

Early in development of the Super AYC, target torque transfer amounts were determined by means of simulations using an analytical technique known as the 'dynamic square' method[2].

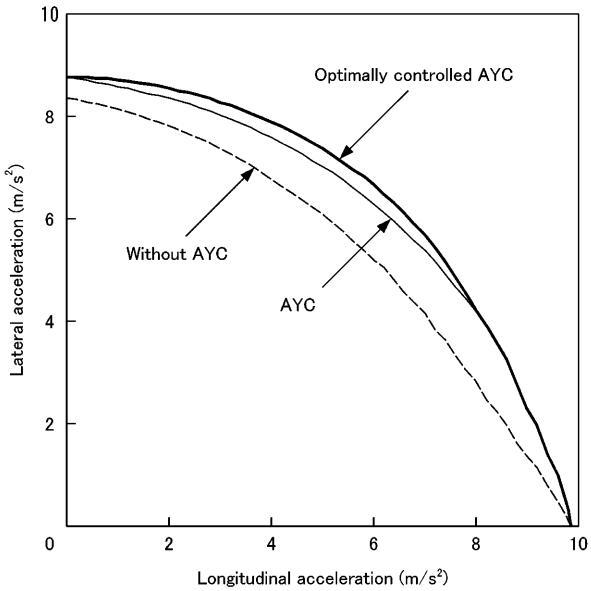

Fig. 1 Acceleration cornering performance

Fig. 1 shows the simulated maximal acceleration cornering performance obtained using an AYC model containing no torque transfer amount limitations on the assumption that the torque difference between the left and right wheels is optimally controlled in accordance with vehicle conditions. It is compared with the acceleration cornering performances of vehicles with and without the AYC. Each of the curves represents the maximum lateral acceleration at which driving is possible with a given longitudinal acceleration rate condition.

The optimally controlled AYC can provide a cornering performance augmentation domain 25 % larger than that provided by the AYC. Since this optimally controlled AYC requires a torque transfer amount 1.8 times as large as the AYC's torque transfer amount, this amount was taken as the target and research was conducted to identify methods for achieving this target.

* Powertrain Dev. Dept., Car Research & Dev. Office, MMC

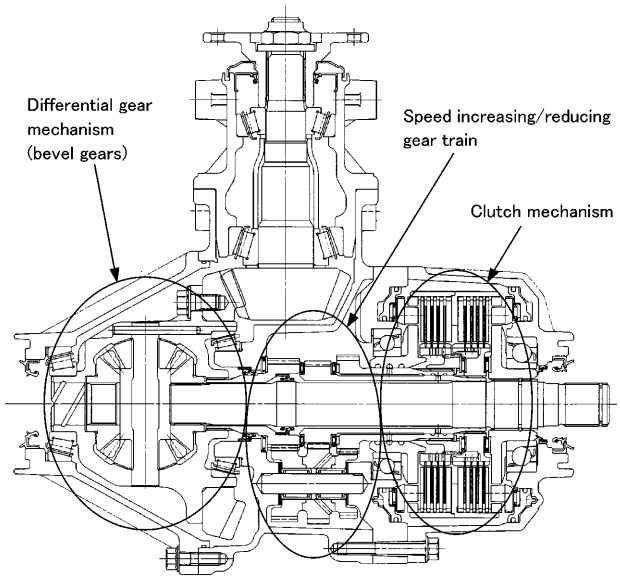

Fig. 2 Cross-sectional view of AYC

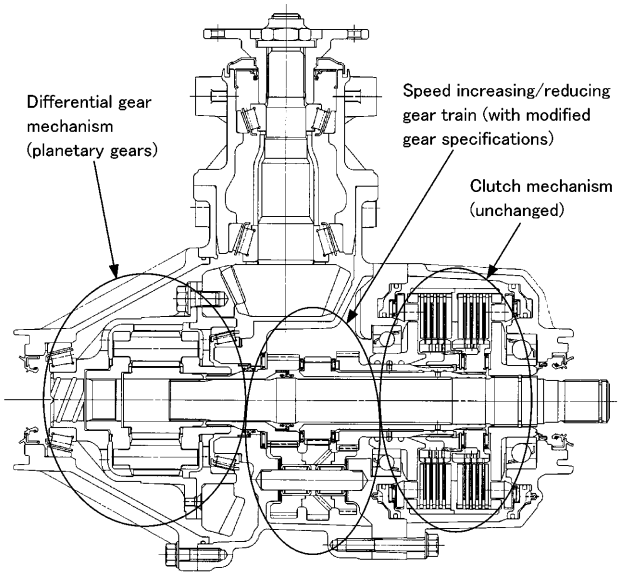

Fig. 3 Cross-sectional view of Super AYC

3. Methods for increasing torque transfer amount

The AYC is a case-to-shaft torque transfer system including a speed increasing/reducing gear train and a clutch mechanism between the input shaft and right axle shaft of the differential gear section (**Fig. 2**).

One conceivable method for increasing the torque transfer amount is to increase the clutch-transmitted torque by, for example, increasing the number of clutch plates, increasing the clutch friction area diameter, or increasing the pressure receiving area of the piston. But attaining the target torque transfer amount by this method would necessitate an increase in clutch size and modification of many clutch components. In addition, the strength of the speed increasing/reducing gear train would have to be increased to accommodate the increased clutch-transmitted torque.

The method actually selected for the Super AYC to increase the torque transfer amount while keeping the size increase and related component modifications to a minimum is a shaft-to-shaft torque transfer arrangement that transmits torque between the left and right axle shafts. This arrangement potentially allows a torque transfer amount twice as large as that allowed by the original system, and it was realized simply by means of a change in the differential mechanism from bevel gears to planetary gears and by modification of the specifications of the speed increasing/decreasing gear train. (**Fig. 3**).

4. Torque transfer mechanism

The mechanism by which the torque transfer amount is increased with the shaft-to-shaft arrangement is discussed hereafter.

Table 1 shows the respective torque paths of the original AYC and Super AYC. The symbols used in this table are interpreted as follows: Ti = input torque; Tl = left wheel torque; Tr = right wheel torque; Tcl = left clutch torque; Tcr = right clutch torque; ρl and ρr = speed increasing/reducing gear ratios when the left clutch and right clutch, respectively, are used.

First, the torque difference ΔT between the left and right wheels is calculated for the previous, case-to-shaft AYC. When the left clutch torque Tcl is made active and the torque is transferred to the left wheel,

$$Tl = (1/2) \cdot (Ti + \rho l + Tcl)$$
$$Tr = (1/2) \cdot (Ti + \rho l + Tcl) - Tcl$$
$$\Delta T = Tl - Tr = Tcl \qquad (1)$$

When the right clutch torque Tcr is made active and the torque is transferred to the right wheel,

$$Tl = (1/2) \cdot (Ti - \rho r \cdot Tcr)$$
$$Tr = (1/2) \cdot (Ti - \rho r \cdot Tcr) + Tcr$$
$$\Delta T = Tr - Tl = Tcr \qquad (2)$$

From equations (1) and (2), it can be seen that the clutch torque in the AYC is equal to the torque difference between the left and right wheels.

In the shaft-to-shaft "Super AYC", when the left clutch torque Tcl is made active and the torque is transferred to the left wheel,

$$Tl = (1/2) \cdot Ti + \rho l \cdot Tcl$$
$$Tr = (1/2) \cdot Ti - Tcl$$
$$\Delta T = Tl - Tr = (\rho l + 1) \cdot Tcl \qquad (3)$$

When the right clutch torque Tcr is made active and the torque is transferred to the right wheel,

$$Tl = (1/2) \cdot Ti - \rho r \cdot Tcr$$
$$Tr = (1/2) \cdot Ti + Tcr$$
$$\Delta T = Tr - Tl = (\rho r + 1) \cdot Tcr \qquad (4)$$

Table 1 Torque flow of AYC

	Torque transfer to left wheel	Torque transfer to right wheel
AYC	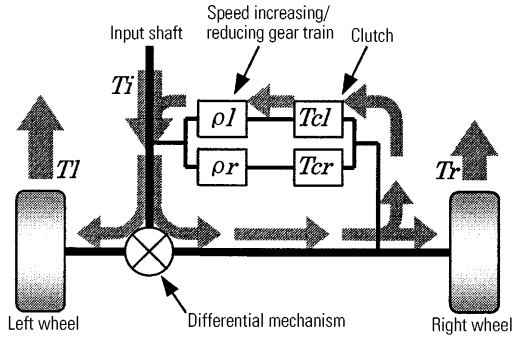	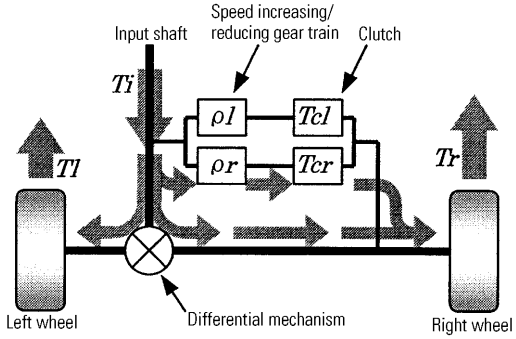
Super AYC	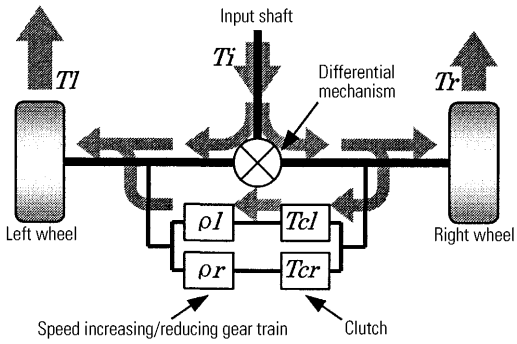	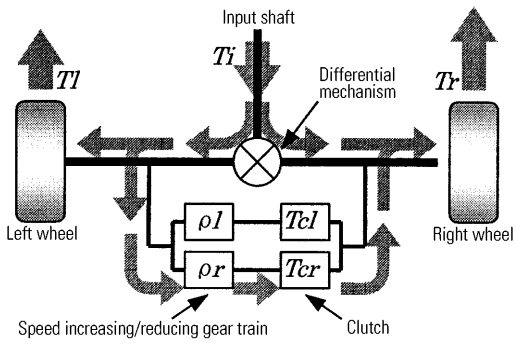

From equations (3) and (4), it can be seen that the torque difference ΔT of the Super AYC depends on the speed increasing/reducing gear ratio values ρl and ρr.

There follows a discussion of the speed increasing/reducing gear ratios ρl and ρr. In the Super AYC, two pseudo left-axle-connected shafts are formed, one having a speed equivalent to the left axle shaft speed reduced by the gear ratio ρl of the speed increasing/reducing gear train (which is connected to the left axle shaft) and the other having a speed equivalent to the left axle speed increased by the gear ratio ρr of the speed increasing/reducing gear train. A left clutch is provided between the former pseudo shaft and the right axle shaft, and a right clutch is provided between the latter pseudo shaft and the right axle shaft. Since these slip-coupled clutches are capable of transmitting torque from the high-speed side to the low-speed side, engaging the left clutch during straight-ahead driving enables the torque to be transferred to the left axle shaft and engaging the right clutch during straight-ahead driving enables the torque to be transferred to the right axle shaft. Also during cornering, torque transfer to the left wheel and torque transfer to the right wheel are both possible (albeit not simultaneously) as long as the speed difference between the left and right wheels is smaller than the amount of increase or decrease of speed created by the speed increasing/reducing gear train, but when the speed difference between the left and right wheels becomes so large that the speed difference at the clutch exceeds zero and reverse rotation starts taking place, torque transfer is possible to only one of the wheels.

With the Super AYC, the gear ratios of the speed increasing/reducing gear train are set so that torque transfer is possible to both the left and right wheels within the range where the speed difference between the left and right wheels does not exceed 20 % of the input shaft speed. This range corresponds to a turning radius of 7.5 m or greater.

The gear ratios of the speed increasing/reducing gear train when the vehicle is making a turn within this range are calculated as follows:
If Ni is the input shaft speed, Nl is the left wheel speed, and Nr is the right wheel speed, the relationship between these speeds is expressed by

$$Nl + Nr = 2Ni \tag{5}$$

When the vehicle is making a right turn ($Nl > Nr$) with the left-right wheel speed difference at 20 % of the input shaft speed, the following relationships must hold true for the left clutch speed difference to be zero.

$$Nl - Nr = 0.2Ni \tag{6}$$
$$Nr = Nl / \rho l \tag{7}$$

From equations (5), (6), and (7), $\rho l = 1.22$.

Similarly, when the vehicle is making a left turn ($Nl < Nr$) with the left-right wheel speed difference at 20 % of the input shaft speed, the following relationships must hold true for the right clutch speed difference to be zero.

$$Nr - Nl = 0.2Ni \tag{8}$$

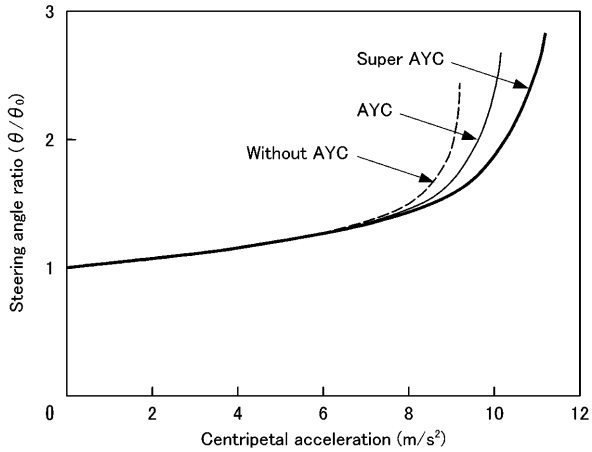

Fig. 4 Constant-radius cornering characteristics

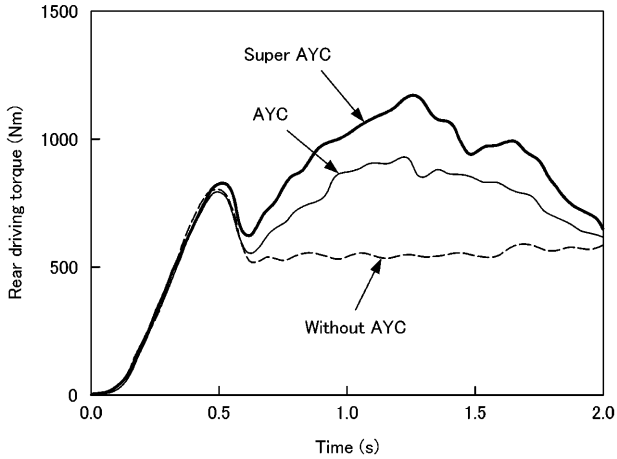

Fig. 5 Rear driving torque at start on split-μ road surface

$$Nr = Nl / \rho r \quad (9)$$

From equations (5), (8), and (9), $\rho l = 0.82$.

From the ρl and ρr values and equations (3) and (4), the left-right wheel torque difference ΔT of the Super AYC is determined as follows:

When the left clutch is engaged: $\Delta T = 2.22\ Tcl$
When the right clutch is engaged: $\Delta T = 1.82\ Tcr$

Although the left-right wheel torque difference for the left clutch torque is not identical to that for the right clutch torque, the target torque transfer amount (1.8 or more times as large as that of the conventional AYC) has been achieved.

5. Control outline

AYC control processes consist of feedback control, whereby the actual wheel speeds are made close to a reference left-right speed difference (which is determined from the steering wheel angle and vehicle speed), and feedforward control, which ensures that the system responds well to the driver's inputs.

These two control methodologies were carried over from the AYC to the Super AYC, but refinements (mainly in the feedback control) were made to realize a more natural operating feel together with improved cornering performance.

6. Verification of system's effects using actual vehicles

The effects of the Super AYC's superior torque transfer capability were verified using actual vehicles.

Fig. 4 shows the cornering characteristics of the vehicles while tracing a circle with a constant 30 m radius and at the same time gradually increasing in speed. The larger torque transfer amount of the Super AYC evidently yielded superior outer-limit cornering performance. **Fig. 5** shows the total rear wheel driving torque during a standing start on a split-μ road surface. The greater torque transfer capability of the Super AYC system evidently yielded higher rear wheel driving torque and superior traction performance.

7. Summary

By means of a change in the torque transfer method, the conventional AYC was transformed with minimal component modification into a new system capable of providing a sufficient torque transfer amount to meet demand for higher cornering performance and traction performance.

The development team will continue working to develop new powertrain systems in pursuit of further improvements in vehicles' dynamic performance.

References

(1) Sawase et al: Development of Active Yaw Control System, Journal of JSAE, Vol. 50, No. 11, 1996
(2) M. Kato et al: Study on Vehicle Dynamics in Marginal Condition Using Dynamic Square Method, IPC-8, 9531020, 1995

Yuichi USHIRODA

Kaoru SAWASE

Naoki TAKAHASHI

Keiji SUZUKI

Kunihiro MANABE